PITMAN'S MOTOR CYCLISTS LIBRARY

The BOOK *of the* J.A.P. ENGINE

W. C. HAYCRAFT

THE BOOK OF
THE J.A.P. ENGINE

SIR ISAAC PITMAN & SONS, LTD.
PITMAN HOUSE, PARKER STREET, KINGSWAY, LONDON, W.C.2
THE PITMAN PRESS, BATH
PITMAN HOUSE, LITTLE COLLINS STREET, MELBOURNE
ASSOCIATED COMPANIES
PITMAN PUBLISHING CORPORATION
2 WEST 45TH STREET, NEW YORK
205 WEST MONROE STREET, CHICAGO
SIR ISAAC PITMAN & SONS (CANADA), LTD.
(INCORPORATING THE COMMERCIAL TEXT BOOK COMPANY)
PITMAN HOUSE, 381–383 CHURCH STREET, TORONTO

MADE IN GREAT BRITAIN AT THE PITMAN PRESS, BATH
C8—(T107)

PITMAN'S MOTOR CYCLISTS' LIBRARY

THE BOOK OF THE J.A.P. ENGINE

A PRACTICAL HANDBOOK ON THE CARE AND OVERHAUL OF J.A.P. ENGINES (1927 ONWARDS), WITH SPECIAL SECTIONS DEALING WITH A.J.W. AND COTTON MOTOR CYCLES

BY

W. C. HAYCRAFT

Written in non-technical language for the benefit of all motor cyclists and others who have occasion to look after the popular J.A.P. engines. Contains comprehensive and helpful advice on lubrication, decarbonizing, valve grinding, running adjustments, carburation, fault finding, ignition, general overhaul, etc.

LONDON
SIR ISAAC PITMAN & SONS, LTD.
1938

PREFACE

J.A.P. engines have earned a well-merited reputation for reliability and efficiency, and the famous firm of J. A. Prestwich & Co. Ltd., which has huge works situated at Northumberland Park, Tottenham, have turned out thousand upon thousand of high-class engines since they started engine design and manufacture in a small way over thirty-five years ago. The majority of engines made have been air-cooled motor-cycle engines, but aero engines have been and are still being made. J.A.P. engines are also to be found on three-wheelers, trucks, trolleys, and lawn mowers. The word J.A.P. has in fact become a household word in so far as small engines are concerned.

All J.A.P. engines have during recent years shown a steady improvement in design, power output, and reliability, and it is perhaps worth recalling that as recently as April, 1937, a J.A.P.-engined Brough-Superior smashed the world's record for a flying kilometre at Budapest, the officially recorded speed being 169·8 m.p.h.

The Brough-Superior is generally regarded as the "Rolls Royce" of motor cycles and it is significant that its designer has chosen a J.A.P. engine. Among other present-day motor cycles fitted with J.A.P. engines may be mentioned the A.J.W., the Cotton, the O.K. Supreme, the Montgomery, the Zenith, the Federation, etc. Special sections at the end of this handbook deal with the maintenance and overhaul of the attractive A.J.W. and Cotton, but the greater part of the book is devoted to the care of J.A.P. engines which are now available in sizes varying from 150 c.c. to over 1000 c.c.

In this handbook no attempt will be made to describe the numerous J.A.P. power units because its object is to assist actual

J.A.P. owners. If you have a J.A.P.-engined motor cycle, three-wheeler, truck, or lawn mower, it is hoped that you will find the chapters in this book of real practical service in enabling you to keep it in the pink of mechanical condition. Full information is given on lubrication, decarbonizing, valve grinding, adjustments, and general overhaul, and the illustrations have been carefully selected. The book is intended to interest both novices and experts and deals with early as well as modern type engines.

W. C. HAYCRAFT

CHISWICK, W.4.

CONTENTS

THE BOOK OF THE J.A.P. ENGINE

CHAPTER I

ENGINE LUBRICATION

THERE is a close analogy between the heart of a man and the oil pump of a petrol engine. Both are responsible for circulating a supply of vital fluid throughout all the working parts, and the moment that supply weakens through whatever cause, serious trouble may be expected.

Five Golden Rules. To ensure a J.A.P. engine being correctly lubricated it is extremely important to observe five rules which are as follows—

(1) Always use a recommended engine oil (see below).
(2) Always maintain sufficient oil in circulation.
(3) Keep the oil clean.
(4) Prevent the oil becoming diluted.
(5) Do not forget to run-in the engine carefully during the first 500 miles.

Suitable Oils for J.A.P. Engines. If you would get the utmost performance and life from your J.A.P. engine, you should regularly replenish the oil tank with one of the following oils recommended by the makers—

(1) Patent Castrol XXL (XL suitable for winter).
(2) Aero Shell.
(3) Mobiloil D.
(4) Price's Motorine B de Luxe.
(5) Essolube Racer.

For racing purposes Castrol R is excellent, but it should be particularly noted that this is a vegetable oil and must *not* be mixed with any of the five mineral base oils mentioned above. If it is used in place of a mineral oil, the oil tank should first be thoroughly cleaned and also the oil sump in the case of an engine with wet sump lubrication.

THE DRY SUMP SYSTEM

The popularity of this system is due to its simplicity, its automatic working with the minimum of attention, and to the fact that it helps to keep the oil cool, which is very desirable. The system was first used on J.A.P. engines in 1932. A double-acting Pilgrim pump was fitted to engines of that year, but all subsequent engines have a double-acting pump of J.A.P. design, details of which are shown in Fig. 1.

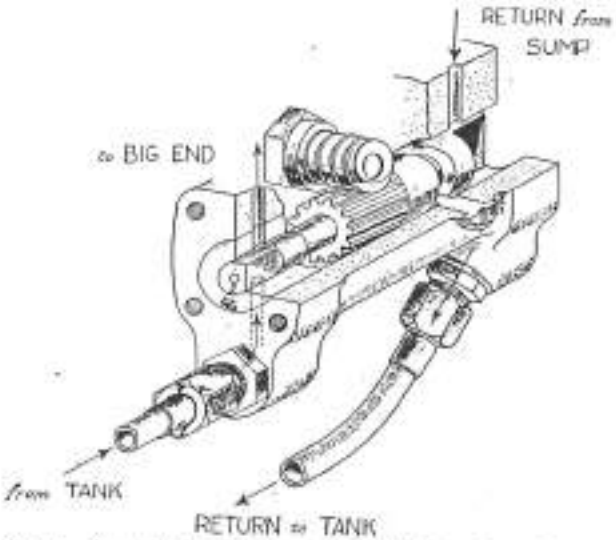

Fig. 1. The "Heart" of the J.A.P. Dry Sump System
During 1932 a double-acting Pilgrim pump (Fig. 2) was used, but on subsequent engines a J.A.P. Mark III oil pump (as above) has been fitted

How the Oil Circulates. Oil is gravity fed from the oil tank to the delivery side of the pump which forces it under pressure to the roller big-end bearing through a drilled timing side mainshaft and crankpin drilled to correspond with the oil-way in the timing side flywheel. On some engines, however, the oil is not forced through a drilled crankpin but breaks the surface of the inside of the flywheel boss directly opposite the big-end bearing. Oil exuding from the big-end bearing on to the flywheels splash lubricates the piston and cylinder walls. On 1100 c.c. S.V. engines an additional oil supply is fed direct from the pump to the base of the front cylinder.

The driving and timing side mainshaft bearings are lubricated by oil collecting upon the crankcase walls and draining through channels to pockets connected by holes with the bearings. Some of the oil in the crankcase is automatically conveyed into an oil-box, a special feature of most J.A.P. engines, via non-return disk valves or a rotary valve (described on page 4), and this oil is utilized on many engines to lubricate the overhead-valve gear (where fitted) or the timing side bearing. Surplus oil is returned to the crankcase.

All surplus oil in the crankcase is trapped by a flywheel scraper

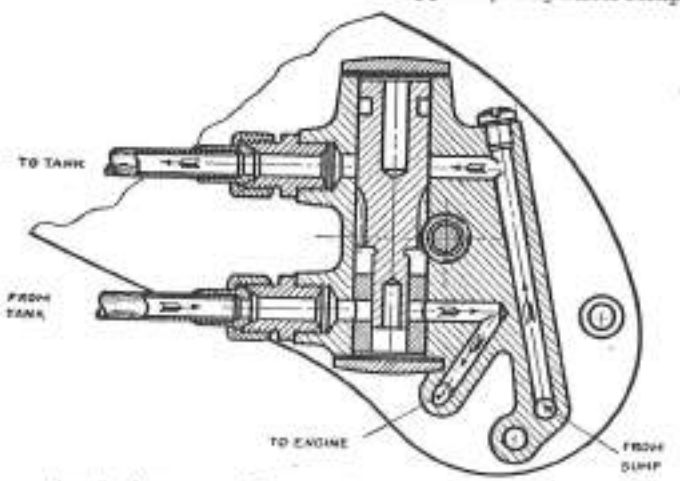

Fig. 2. Sectional View of Pilgrim Mechanical Pump

cast across the bottom of the crankcase and is diverted to the sump which is connected by drilled crankcase passages with the return side of the pump. The pump then returns the oil under pressure to the oil tank, which has a large filter to remove impurities collected during circulation which goes on so long as the engine is running. It should be noted that the return side of the pump is of greater capacity than the delivery side, so that the sump is always kept "dry." No adjustment for the pump is provided, the oil supply being automatically increased with increase in engine revolutions. See also page 8.

The J.A.P. Oil-box and Rotary Valve. As already mentioned, most engines incorporate a special oil-box for separating oil from the crankcase vapour and using it for auxiliary lubrication. On J.A.P. engines the crankcase and timing case are in communication

with each other, so that oil is thrown liberally over the timing gears. It then, on earlier engines, passes into the oil-box via a set of vacuum valves and is maintained at atmospheric pressure by means of a projecting relief pipe. On many later type engines (dry sump or mechanical pump) a rotary valve (Fig. 2A) is provided. Between the timing case and oil-box there is a vertical passage which is closed at the upper end by a horizontal sleeve. The sleeve is driven off the engine camwheel at engine speed and

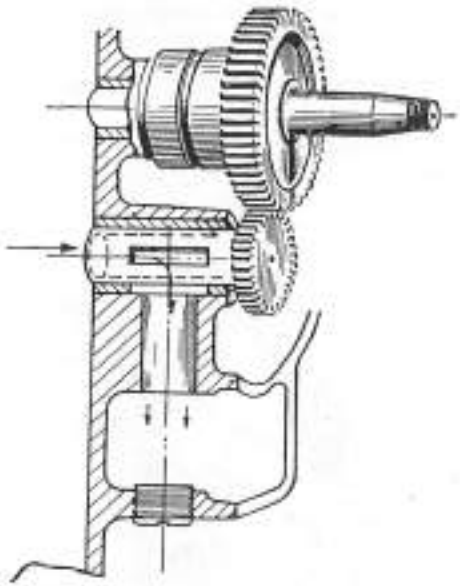

FIG. 2A. HOW OIL FROM THE CRANKCASE IS ADMITTED INTO THE OIL-BOX BY A ROTARY VALVE

the driven end is blanked off. The other end is in communication with the crankcase and, when a slot in the sleeve registers with the vertical passage, the descending piston forces oil mist through into the oil-box, where it condenses, the air escaping to the atmosphere via the relief pipe and the oil settling to the bottom of the box. The timing of the rotary valve is such that the slot begins to open 65 degrees before the piston reaches bottom dead centre. The rotary valve on twin-cylinder engines should be timed on the *front* cylinder. To ensure correct replacement the rotary valve and camshaft gears are punch-marked.

On some engines the crankcase pressure release valve has been incorporated in the timing spindle and its method of working is the same as the rotary valve just described. Correct timing is such that the leading edge of the spindle hole meets the leading edge of the bush hole 65 degrees before bottom dead centre. If at any time the off-side mainshaft is separated from its flywheel, it is necessary to mark the position of the spindle relative to the flywheels.

Lubrication of Overhead Valve Gear. During 1927 grease-gun lubrication was provided for the rocker spindle bearings on O.H.V. engines, but from 1928 onwards automatic lubrication has been used. On engines designed before 1933 the bearings for the rockers were lubricated by oil mist passing up the push-rod cover tubes from the timing box. On later engines, however, the rocker-box bearings and valve guides are positively lubricated by oil drawn up from the oil-box.

Passing from the oil-box through the timing gear is an oil pipe which is connected to the rear of the rocker-box. Now the timing gear is in a partial vacuum during upward piston strokes and, since the rocker-box communicates with the timing case by means of the push-rod covers, a semi-vacuum is also created in the rocker-box, with the result that oil is drawn up from the oil-box where it is stored at atmospheric pressure. On entering the rocker-box some of the oil is trapped by webs and passed on to the rocker bearings; the remainder passes along two small pipes and lubricates the valve guides.

In the case of some O.H.V. engines including the J.A.P. Twins and the latest "high camshaft" engines (see page 8) oil is by-passed direct to the rocker bearings from the pump, the surplus afterwards returning to the sump through the push-rod covers.

Five Maintenance Points. To ensure a J.A.P. engine with dry sump lubrication working smoothly and efficiently, there are five important points which must always be looked to. Here they are—

(1) Always replenish with suitable engine oil.
(2) Keep the oil-level in the tank correct.
(3) Check the oil circulation frequently.
(4) Clean the oil tank and filter regularly.
(5) See that all pipe unions are kept airtight.

(1) Engine Oil Replenishment. The question of what engine oil to use has already been discussed on page 1, and you are advised to run on one of the five oils mentioned.

(2) Maintain the Correct Oil-level. With dry sump lubrication the whole of the oil in both the tank and engine is in constant circulation and for this reason it is exceedingly important to keep the oil-level correct. Unless this is done the oil will not keep

cool and is prone to become contaminated and diluted during circulation to a dangerous extent, with the consequent risk of injuring the engine. To be on the safe side, it is desirable always to keep the oil tank *more than half full*, about three-quarters full for preference. But avoid over-filling the tank so that the level rises to more than 1 in. below the return pipe orifice, and on no account allow the level to fall below the half-full mark. The filler cap should be removed about every 150 miles, the level inspected, and the tank topped up with fresh oil if necessary.

(3) **Verifying Oil Circulation.** To ascertain that the oil is circulating properly, remove the tank filler cap and observe whether oil is being steadily returned from the orifice of the return pipe. It should issue in a regular succession of drops or bubbles. On starting up, however, it is not unusual for the flow to be erratic and excessive. Air leaks are suggested by a "frothy" return of oil, and if such is present the pipe unions should be tested for tightness. Possible causes of an irregular return are—

(1) Insufficient oil in the tank.
(2) A dirty tank filter.
(3) Choked or leaky oil pipes.
(4) A defective oil pump.

With the Pilgrim double-acting pump it is not possible to observe the oil being delivered to the engine at the pump. A sight-feed window is not provided.

(4) **Cleaning Oil Tank and Filter.** The oil tank and filter on (some machines the filter is incorporated in the tank union) should both be thoroughly cleaned on completing the running-in period and subsequently at intervals of about 1000–1500 miles. The tank should then be replenished to the correct level with fresh oil. This is most important. However carefully a machine is handled, carbon particles, metallic dust, and unburnt fuel slowly but surely contaminate the oil, and unless removed, the impurities may not only damage the engine bearing surfaces but also give rise to choked oil-ways, which is a serious matter. It is best to drain the oil tank after a run when the oil is warm and thinned down somewhat. Place a good-sized receptacle below the drain plug to catch the oil as it runs out on removing the plug and be sure that the whole of the oil is drained off. Afterwards the tank should be removed and very thoroughly cleaned with petrol, and the same applies to the filter.

If the filter is made of fabric, handle it with great care and brush it gently. Where a gauze filter is used (such as on the A.J.W. and Cotton) avoid cleaning it with a fluffy rag which is liable to choke the mesh. It is desirable to renew a fabric filter about every 5000 miles as its filtering qualities deteriorate. Having cleaned the

tank and filter and replenished the former with plenty of fresh oil, prime the delivery pipe by securing the upper union and allowing oil to begin to run out before securing the lower union; this prevents the possibility of an air lock forming. It is advisable to flush out the crankcase with flushing oil when decarbonizing.

(5) **Preventing Air Leaks.** A dry sump lubrication system will not function perfectly if there are any air leaks on the delivery or return side of the pump and therefore the unions at both ends of the pipes must be kept done up absolutely tight. It is a good plan to test the union nuts with a spanner occasionally as vibration sometimes causes them to work loose. Air leaks on the return side often cause the plug to oil up.

Oil Leakages. It sometimes happens that an engine begins to become smothered with oil on the outside, thus spoiling its appearance, preventing the proper dissipation of heat, and increasing oil consumption. Possible causes of oil leakage include the following—

(1) A choke in the return pipe or return side of the pump.
(2) A faulty rotary valve or non-return valve.
(3) Defective push-rod or rocker-box cover joints.
(4) A loose union on the rocker-box feed pipe.
(5) Leaky pump or oil-box cover joints.
(6) Imperfect crankcase or timing case joints.

The remedies for the above troubles are fairly obvious. In the event of a choke in the return side of the lubrication system occurring, there is a strong probability of oil being forced out at some joint. Evidence of a choke would be failure of oil to issue from the return pipe, but this might also be due to other reasons (see page 6). Defective timing case or oil-box non-return valves would tend to build up pressure in the crankcase and so cause oil leakage at the "point of least resistance." Trouble with the non-return valves, however, is unlikely and it is inadvisable to remove the securing screws which in most cases are burred over on the inside. In the case of the rotary valve there is nothing to go wrong and failure here can only be due to incorrect timing of the valve (see page 4). Should oil leakage occur at the push-rod cover joints, inspect the rubber washers and, if perished or damaged, renew them. Also see that the springs at the foot of the push-rods are properly located and keeping the push-rods tight against the washers. Jointing compound should be used for the timing case, magneto chain case, and for the crankcase joints, but paper washers (oiled) should be used for the timing and magneto chain case joints on "high camshaft" engines. The oil-box has a fibre washer and the pump has a rubber ring to exclude oil. No cylinder-base washer is provided.

Pump Troubles. The plunger type of pump used on J.A.P. engines has no ball valves or delicate parts likely to need adjustment or give trouble, and a defect in the pump is a rare occurrence. All moving parts are well lubricated and wear takes place very gradually indeed. It is imperative, however, always to keep the set pin which projects into the cam groove right home and to see that all washers are in perfect condition. All pump joints and plug screws must be kept airtight and the use of a liquid packing such as "Hermitocoll" is advised for all plug screw threads.

When dismantling the pump for cleaning (only necessary at long intervals) be sure to remove the set pin before attempting to remove the plunger and on no account use any force on the latter. The plunger should be pushed out from the small end after removing the set pin and end plates. The driving worm need not be taken off as the small end of the plunger just clears it. When replacing the plunger, see that the plunger gear engages the worm on the engine pinion lock-nut and that the set pin is located properly before screwing it fully home which should be done without any force. The J.A.P. pump body is cast in one with the timing cover and the pump plunger is readily accessible on removing the cover.

Dry Sump System on "High Camshaft" Engines. On the recently introduced "high camshaft" engines the method of oil circulation is considerably different to the system used on standard engines and described on page 2.

To ensure thorough lubrication, the oil pump situated in the timing case cover draws oil from the tank and pressure feeds it direct to the big-end bearing and camshaft. Oil from the camshaft is caught in a trough and conveyed to a recession in a boss on the timing side flywheel. Centrifugal force then causes it to be fed to the big-end and supplement the pressure feed. The by-pass from the pump leads direct to a rotary valve in the flywheels communicating with the big-end bearing and there are thus two separate feeds to the big-end—one by gravity and the other by pressure.

As on the other engines, the cylinder walls are splash lubricated from the big-end. Surplus oil drains to the sump and is returned to the oil tank by the pump. Thus plenty of cool oil is fed to the engine so long as the tank is kept well replenished (page 5). With regard to the overhead valve gear, the valve rockers and springs are totally enclosed and lubricated by oil from the oil-box. Surplus oil drains to the crankcase through the push-rod cover tube.

THE WET SUMP SYSTEM

The wet sump lubrication system, which is a "one way" type, has the advantages that the crankcase can frequently be drained

off without much loss of oil and that the oil supplied to the engine can be adjusted by means of a regulator situated on the mechanical pump.

Several types of mechanical pumps have been fitted to J.A.P. engines, namely the Pilgrim, the "Best," and the J.A.P. The Pilgrim and "Best" designs have been most widely used. These two pumps, which are mostly of the sight-feed pattern, are very similar in construction and method of working.

Oil Circulation. On leaving the mechanical pump the oil is pressure fed direct to the big-end bearing, the cylinder and piston being splash lubricated. On some wet sump engines, however, oil is fed into the timing case and flows along a groove through the timing side bearing into a circular recess in the timing side flywheel. A hole is drilled in the flywheel between the recess and the crankpin hole and centrifugal force carries the oil via this hole to the big-end. Both mainshaft bearings are lubricated by oil collecting on the crankcase and walls and draining into pockets leading to the bearings; the timing gear is oiled through the crankcase and timing case being in communication with each other, and the overhead valve gear (where provided) is lubricated from the oil-box (see page 5), or from the timing box on earlier engines.

Six Maintenance Points. The owner of a J.A.P. engine with wet sump lubrication should, besides seeing that the correct engine oil (page 1) is used, observe the following important maintenance points—

(1) Always keep the oil-level in the tank above the filter.
(2) Frequently check the oil circulation at the sight-feed.
(3) See that the mechanical pump is correctly adjusted.
(4) Keep the delivery pipe unions and sight-feed airtight.
(5) Clean the tank filter occasionally.
(6) Periodically drain and flush out the crankcase.

Level of Oil in Tank not Important. Provided that the oil-level is such as to keep the filter completely submerged, it is immaterial how much oil there is in the tank with a wet sump lubrication system. If the filter is not completely submerged, there is a considerable chance of air being drawn in and fed to the pump, thus upsetting proper circulation. In connexion with sight-feed pumps there is one point worth noting: should you replenish the tank with Castrol R (for racing purposes), it is desirable with the assistance of a little petrol or benzole to scrape the enamel off the well of the sight-feed chamber, because this vegetable oil attacks it.

To Adjust Pilgrim Pump. The Pilgrim mechanical pump is simply adjusted by turning the milled regulator disk on the left-hand side of the pump clockwise or anti-clockwise, according to whether it is desired to reduce or increase the oil supply respectively. Once the correct setting has been arrived at, it is best to leave the regulator alone. It is not necessary to turn the regulator right off each time the engine is stopped because, when the pump plunger is stationary, no oil can find its way through to the engine.

Where a new engine is concerned, it is a good plan to adjust the pump in the following manner. Get the engine gently ticking over and then temporarily cut the oil supply right off by turning the regulator clockwise as far as it will go. Then rotate it anti-clockwise until oil is observed just beginning to issue from the beak. Now further turn the regulator 3–4 of the 7 numbered divisions. This should give approximately the right setting for running-in, but if the engine "smokes" much, reduce the oil supply slowly by means of the notches between each division, whose individual "clicks" can be heard. About 1½ turns from the full "off" position (or 25–30 drops per minute) should prove a satisfactory average adjustment for single-cylinder engines, though, as already stated, the rider should exercise some discretion in the matter. A slight blue haze should be visible at the exhaust on opening the throttle suddenly in neutral. If very high average speeds are indulged in or arduous hill climbing is undertaken, the oil supply should be increased accordingly.

To Adjust the "Best" Pump. A somewhat different form of adjustment is provided on the "Best" mechanical pump. After loosening the two regulator fixing screws, the regulator may be turned clockwise to increase the oil supply or anti-clockwise to reduce it. Positive (+) and minus (–) signs indicate in which direction the regulator should be turned. It should be noted that the supply of oil delivered by the pump is roughly proportional to the regulator position, and since for normal purposes it is desirable to set the pump to deliver about one-quarter of its maximum, it follows that the regulator should be turned about one-quarter on, the final adjustment being arrived at by noting the sight-feed, exhaust, etc. On no account attempt to adjust the regulator without first loosening the two small screws, and after making an adjustment be absolutely sure that the screws are firmly re-tightened. Neglect to do this may cause damage to the pump plunger and will in any case spoil the adjustment. As in the case of the Pilgrim pump, it is quite unnecessary to turn the regulator off when leaving the engine stationary.

How to Prime the "Best." Occasionally, after dismantling a "Best" pump, some difficulty is experienced in getting the pump

working properly again after reassembling it. In this case the remedy is to prime the cam block and plunger with oil and exclude all air. To do this, turn the regulator mid-way between the "+" and "–" signs, leave the upper screw loose (two or three turns), and run the engine until oil begins to creep between the plate and pump body. Before priming the pump see that the pipe from the tank is full of oil.

What to Do if the Sight-Feed Fills Up. Occasional filling up of the sight-feed in cold weather may be due merely to the viscous state of the oil, and the remedy is to increase the supply of oil for a short time, when the trouble will probably cure itself.

In the event of any small particle of dirt or foreign matter lodging between the ball valve and its seat on a Pilgrim pump, the sight-feed will fill up with oil when standing, and the ball valve should be attended to. This ball valve is situated in the body of the pump underneath the beak and the ball, spring, valve seat and passages should be thoroughly cleaned. To do this it is necessary to unscrew the glass window and then with a pair of flat-nosed pliers remove the spout or beak which is a tight push fit in the body of the pump.

Chronic and regular filling up of the sight-feed under all conditions of temperature and oil may be due to wear of the end cam or cam groove in the case of a Pilgrim or "Best" pump respectively, and the remedy is obvious; fit a new part.

Some Possible Causes of Irregular Pump Action. Trouble seldom occurs with a mechanical pump, but if oil is passed irregularly or the supply of oil falls off at high speed, look to the following three points—

(*a*) Examine and if necessary clean the filter in the tank or tank union. See that the level of oil in the tank is not so low as to prevent the filter being completely immersed, otherwise air instead of petrol may be passed to the pump and engine.

(*b*) See that there are no particles of fluff or dirt obstructing the action of the ball valve or any of the passages. For remedy, see paragraph relating to filling up of the sight-feed chamber.

(*c*) Check that there are no air leaks on the inlet side of the pump and that all pipe unions are tight. Test them with a spanner but do not be "hard fisted."

Dismantling Pilgrim Pump. This is rarely necessary but if you must take it to bits, first and foremost unscrew the worm driving spindle bush screws and remove the worm and spindle. Until this has been done you must on no account remove or attempt to remove the plunger. The penalty is expensive damage! It should also be noted that it is dangerous to remove the worm with either the end plate or the end cam previously removed from the body of the pump. After removing the worm, remove

the end plate and withdraw the plunger. When reassembling first fit the end cam (if this has been removed) and then the plunger should be inserted cam first, so that the two cams are in contact with each other. Then replace the return spring in the open end of the plunger (i.e. the end with the longest hole) and box it in with the end plate. It now remains to complete assembly by inserting the worm and screwing down the spindle bush.

Cleaning Tank Filter. On J.A.P. engined machines with wet sump lubrication a gauze filter is incorporated in the tank or tank union, and it is advisable to remove this for cleaning with petrol about every 5000–7000 miles. Although contamination of the oil by the engine does not occur, impurities of one kind or another do gradually collect on the filter and must be removed periodically, otherwise a diminished oil supply may be caused.

Flush Out Crankcase Every 2500–3000 Miles. On all wet sump engines the oil in the crankcase gradually gets contaminated and diluted, and the drain plug at the base of the crankcase should be removed about every 2500–3000 miles and all oil and sludge drained off. Do this when decarbonizing and preferably after a run when the oil is warm. After draining off the old oil, turn the oil pump regulator right off and then flush out the crankcase with one of the special flushing oils marketed by most accessory dealers. Again drain the crankcase and, if the cylinder has been removed, pour some clean oil over the flywheels before refitting it; this is advised because the mechanical pump cannot be relied upon to deliver a large supply of oil immediately, even with the regulator turned full on.

Dealing with Oil Leakage. If the engine becomes dirty on the outside through oil leakage, look carefully for one of the possible causes mentioned on page 7, with the exception, of course, of No. 1.

Lubrication of Overhead-valve Gear. The notes concerning rocker spindle and valve guide lubrication given on page 5 are applicable in regard to engines with both the dry and wet sump lubrication system.

Magneto Chain Lubrication. Lubrication of the magneto, Magdynamo, Magdyno, or dynamo (coil ignition) chain is entirely automatic by means of a ball valve on the timing cover wall.

Lubrication of Lucas Dynamo. As in the case of the Lucas "Magdyno," the bearings are packed with grease on assembly and no attention is necessary until a very big mileage has been covered, when the instrument should be returned to the makers. About every 5000 miles put a few drops of thin oil into the commutator end bracket lubricator.

Magneto Lubrication. Deal with as described for the magneto portion of the Lucas "Magdyno."

Miller Magdynamo and Dynamo Lubrication. On assembly, all bearing housings are packed with grease, and under normal conditions this should suffice for 10,000–15,000 miles. At the end of this mileage the instrument should be returned to the makers or one of their agents in order to have the bearings repacked with grease. On some Miller dynamos where provision for lubrication is included, insert 2–3 drops of oil about every 1000–2000 miles through the lubricator on the driving end.

"Magdyno" Lubrication. Both the armature bearings and the gears between the magneto armature and dynamo are packed with grease by the makers during assembly, and no further attention is required until many thousands of miles have been covered, at which time the complete instrument should be returned to the makers for cleaning and regreasing. A tip deserving of mention (applicable to cam ring type contact-breakers) is to put periodically a spot of oil on the heel of the contact-breaker rocker-arm so as to reduce wear, but avoid allowing any oil to get on to the contacts. If stiff, put a spot of oil on the rocker-arm pivot.

In the case of a Lucas "Magdyno" with ring type cam, the cam ring should be withdrawn about every 5000 miles and a few drops of thin machine oil put on the felt. On a "Magdyno" with a face type cam, the wick should also be similarly lubricated. To gain access to the wick, remove the spring arm which carries the contact and withdraw the screw which carries the wick. It is important to see that the small backing spring is correctly replaced when refitting the arm.

CHAPTER II

DECARBONIZING AND VALVE GRINDING

It is advisable, in order to preserve engine flexibility, high performance, and sweet running, to decarbonize J.A.P. engines about once every 2000–2500 miles and, in the case of a new engine, after completing the first 1000–1500 miles.

Preliminary Stripping Down. Before starting on the job of dismantling the engine for decarbonizing it is always a good plan to clean the exterior thoroughly with rags and paraffin if the engine is dirty. This facilitates dismantling and prevents the possibility of dirt getting inside the engine.

On many motor cycles, especially those of the side-valve type, it is quite unnecessary to disturb the tank, but on some overhead-valve machines where there is not much clearance between the rocker-box and tank its removal undoubtedly facilitates dismantling and in certain instances may be actually necessary. If the tank is removed, take care not to lose the small insulating rubbers. Proceed to remove those items which hinder dismantling proper. Unscrew the sparking plug, disconnect the petrol pipe, and take off the carburettor. On most overhead-valve J.A.P. engines of recent manufacture the carburettor has a flange fixing, but on side-valve engines a clip fixing is employed. On some twin-cylinder engines the induction pipe has tapered collars with nuts (R.H. threads) bored to a corresponding taper, and the induction pipe must, of course, be removed. Next disconnect the exhaust pipe(s) at the cylinder head and also the exhaust valve lifter wire at the rocker-box on "high camshaft" engines. On side-valve engines remove the valve caps (where fitted). As the various parts are removed, wipe them clean and lay them on a clean sheet of paper or in a box ready for reassembly. Now turn the engine over until both valves are fully closed.

Removing Valve Caps. On side-valve engines having aluminium valve caps it is preferable to remove the caps after allowing the engine to cool down, because aluminium contracts to a greater extent than does cast iron. Unscrew the valve caps with the cylinder in position, as this enables good leverage to be obtained without risk of damaging the cylinder base. If cast-iron valve caps are provided, removal is usually facilitated by first warming up the engine. Examine the valve cap washers closely and, if they appear damaged or leaky, renew them, otherwise some loss of

compression may occur. A good method of testing for leaky valve caps is to smear some oil around the joints and watch for bubbles on kicking the engine over.

To Dismantle Side-valve Engines. Many J.A.P. side-valve engines made in 1927 onwards have the cylinder head and barrel

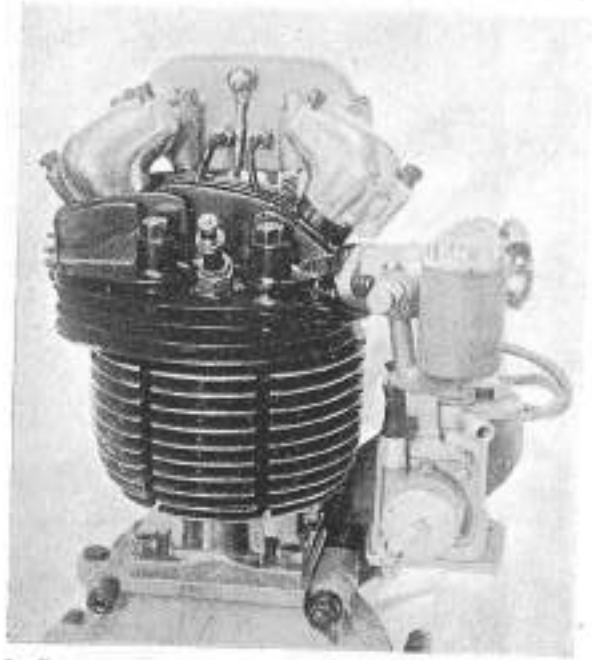

Fig. 3. Showing Cylinder, Cylinder Head and Rocker-box Assembly on 1938 J.A.P. 500 c.c. Sports Engine

Note the neat method of enclosing the valve springs with quickly detachable covers, the oil feed to the back of the rocker-box, and the two pipes leading to the valve guides

cast integral and it is necessary, in order to decarbonize, to remove the cylinder (see page 19) after first removing the carburettor, plug, etc. In the case of twin-cylinder engines, deal with each cylinder separately and be most careful not to mix up any of the parts. Some side-valve engines have detachable cylinder heads with the valves situated below the head, and, unless it is desired to remove the piston in order to clean the inside and the ring grooves, the

only dismantling needed is to remove the head after unscrewing the fixing bolts, which should be done in a diagonal order to prevent straining the head. If the head will not lift off readily, tap it gently upwards with a hammer applied above the inlet or exhaust port, but be sure to interpose a piece of wood to prevent damaging the brittle fins. Turning the engine over compression with the plug in position will often suffice to break a stiff joint. Handle the copper gasket with care and, if there are any signs of "blowing," re-anneal it or fit a new one before reassembly.

To Dismantle Overhead-valve Engines (Standard Type). Constructionally the Standard and Sports engines are similar, and the following instructions apply to nearly all O.H.V. engines except those of the "high camshaft" type. All O.H.V. engines have a detachable cylinder head but, before this is removed, the rocker assembly and push-rods must be taken off. On 1927–8 engines an open type rocker gear is fitted, but all 1929 engines onwards have the enclosed rocker-box type.

On 1927–8 engines first remove the push-rods by levering open the valves and then remove the split pin on the rocker spindle and unscrew the fixing nut. The rocker spindle can now be unscrewed from the rocker standard by inserting a screwdriver in the slot provided. On no account attempt to drive out the spindle or a broken rocker standard will result. After removing both inlet and exhaust rockers the cylinder-head bolts can be unscrewed by means of the special angle spanner provided.

To remove the rocker-box on later engines proceed as follows. Take off the rocker-box end plate by unscrewing the lever nut and then with a screwdriver or similar tool lever upwards (using the centre stud of the rocker-box as a fulcrum) each steel rocker-arm as shown in Fig. 4 until its cupped adjuster screw disengages the loose ball in the cupped end of the duralumin push-rod. This enables the push-rod and also its cover tube to be pulled right out after pressing the cover downward with the flat side of a screwdriver. Deal with each push-rod in this manner and be careful with the large oil-sealing washers inside the lower push-rod cover supports and the small washers provided at the upper spigots on recent engines.

In the case of engines made in 1934 onwards, disconnect the oil pipe at the back of the rocker-box by unscrewing the union and disconnect the two small pipes leading to the valve guides (Fig. 3). Where quickly-detachable valve spring covers are fitted, these must also come off. Now unscrew the two bolts which secure the rocker-box to the cylinder-head bolts at the front and lift the rocker-box off the cylinder head as illustrated in Fig. 5. The four cylinder-head bolts may then be removed (unscrew them diagonally) and the head gently lifted off the cylinder barrel. If

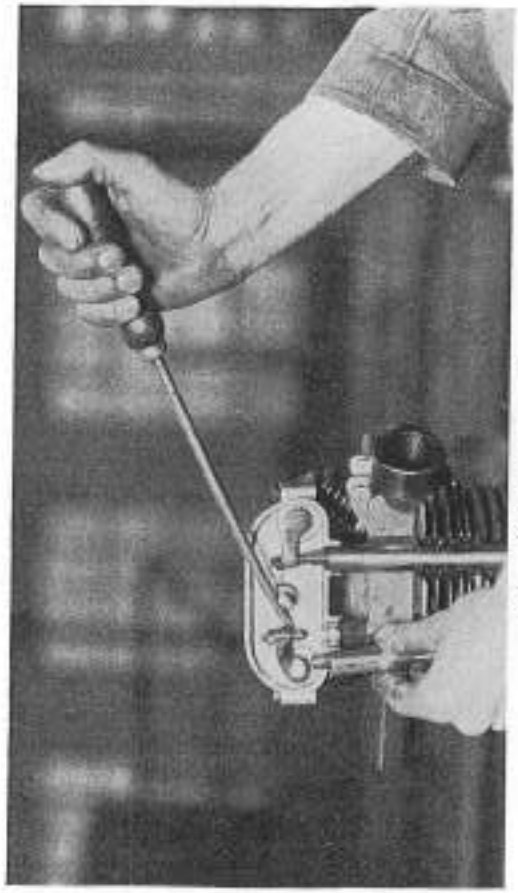

FIG. 4. REMOVING THE PUSH-RODS

The valve springs may be readily compressed by levering up the rocker-arms in the manner shown. This frees the push-rods which may be withdrawn with their cover tubes

(*Courtesy George Scamell, Ltd.*)

the joint is stiff, tap the head gently as mentioned in a previous paragraph dealing with S.V. engines, and do not omit to scrutinize the condition of the plain copper gasket. On some J.A.P. O.H.V.

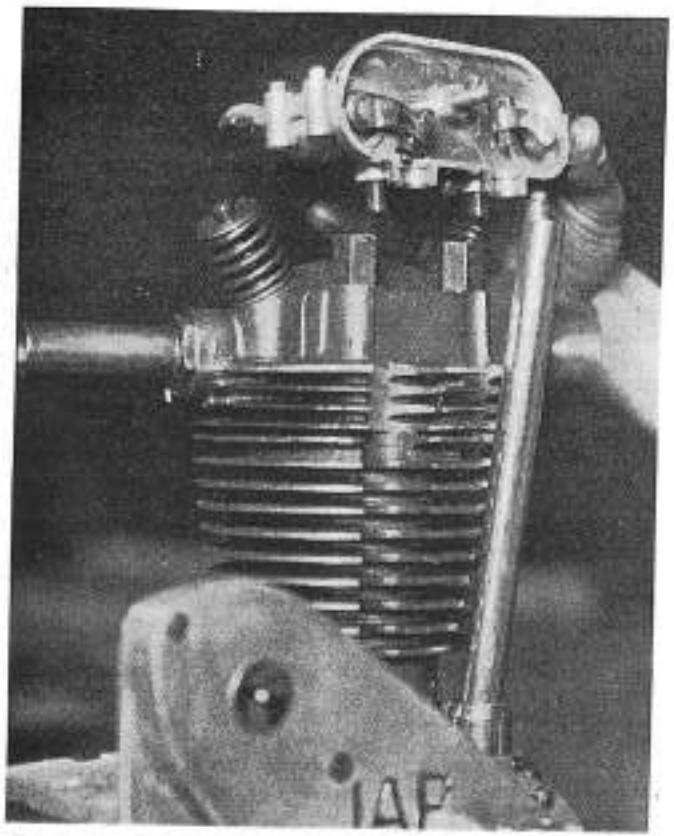

FIG. 5. TAKING THE ROCKER-BOX OFF THE CYLINDER HEAD
(Courtesy George Newnes, Ltd.)

engines it is not easy to remove the cylinder-head bolts with an ordinary straight spanner and in such cases a special angle spanner (Fig. 6) is provided in the tool-kit. Having removed the cylinder head, place it in a safe place ready for decarbonizing, and if you

desire to remove the piston, take off the cylinder barrel as described below.

To Dismantle "High Camshaft" Engines. First of all unscrew the large nut at the base of the push-rod cover tube. Then

FIG. 6. REMOVING CYLINDER-HEAD BOLTS WITH SPECIAL ANGLE SPANNER
Courtesy George Newnes, Ltd.)

unscrew the four bolts which secure both the rocker-box and cylinder head (these are integral) and remove the two together as well as the push-rod cover. If it is desired to detach the rocker-box cover from the cylinder head, unscrew the seven retaining bolts. The cylinder barrel may then be removed as follows.

Removing the Cylinder. It is a simple matter to remove the

cylinder or cylinder barrel as the case may be. On "high cam-shaft" engines slacken off the two top crankcase bolts as well as the four bolts securing the cylinder and head, or on other engines undo the four nuts holding the cylinder flange to the crankcase, being careful to loosen them diagonally. Before removing the nuts, however, turn the engine over until the piston is near bottom dead centre, keeping it in position by putting the machine in gear. Now grip the cylinder firmly in both hands and gently withdraw it from the piston. Where the engine is inclined in the motor-cycle frame, it is necessary to draw the cylinder off at an angle, but in many cases it is possible to lift the cylinder off vertically. No cylinder-base washer is provided. Special care should be taken while removing the cylinder not to allow the piston skirt to fall sharply against the connecting-rod or crankcase studs, and a rag should always be wrapped around the bottom of the piston. This not only prevents the risk of the piston being distorted but also prevents any foreign bodies getting into the crankcase, an accident which may cause an immense amount of bother. It is also most important when removing the cylinder not to exert any side strain which is apt to bend the connecting-rod out of truth.

On the special O.H.V. racing engines the cylinder head and barrel are secured to the crankcase by flanged bolts which screw into the cylinder head.

Piston Removal. After removing both the cylinder head and/or the cylinder, proceed to remove the piston from the connecting-rod by taking out the gudgeon-pin. In the case of aluminium alloy pistons made up to the year 1928, fully floating gudgeon-pins are used, the pin being free to move in both the small-end and piston bosses. It is important that the ends of the hard gudgeon-pin never come into contact with the cylinder walls, otherwise scoring is likely to occur, and to prevent this 1927–8 fully-floating gudgeon-pins are provided with soft end caps. Such gudgeon-pins can be tapped out from one side and the piston taken off. It is necessary, however, on all later engines to support the piston and connecting-rod firmly or else to warm the piston before attempting to remove the gudgeon-pin. This can be done by heating with a blow-lamp after removing the tank. If by any chance stiff, tap it out gently with a piece of hardwood or a soft-nosed drift interposed. After removing the gudgeon-pin a slight nick should be made on one end so as to ensure its correct replacement which is most important.

On 1929 and subsequent engines, the hollow gudgeon-pin is retained by means of two spring circlips, which bed down into grooves machined at each outer end of the gudgeon-pin hole in the piston boss. It is only necessary to remove one of the circlips in

order to push out the gudgeon-pin, and this may be done by closing the ends together with a pair of small round-nosed pliers. As a rule it is advisable to replace a circlip after removal because if its springiness is affected it may come adrift and cause irreparable damage to the cylinder.

Mark the Piston. A piston laps out the cylinder in which it reciprocates in a certain manner depending upon piston thrust, lubrication and other factors, and it is most inadvisable to replace it in any except its original position on the connecting-rod; that

FIG. 7. A SAFE METHOD OF REMOVING PISTON RINGS

This method (see text) besides eliminating the risk of breakage is also least calculated to damage the lands between the rings or the piston ring grooves. Use the same method for refitting rings

is to say, it should not be replaced back to front or vice versa. Therefore, unless the piston has some distinguishing characteristic it is always advisable to mark it to ensure its correct replacement. Perhaps the best plan is to scratch an "F" on the inside to indicate which is the front. Be careful not to interchange the pistons on a twin-cylinder engine, and always remember that a piston should be handled with care as it is readily distorted or cracked.

To Remove Piston Rings. Piston rings being made of cast-iron are very brittle, and it is generally unsafe to open the rings and slip them straight off by hand owing to the considerable risk of breaking them which may cause much inconvenience if spare rings suitable for the particular engine concerned (and no other rings will do) are not at hand. Piston rings should never be sprung out wider than the diameter of the piston, and the best and safest

method of removing the rings is illustrated in Fig. 7. Three strips of sheet tin (about 20 gauge), approximately 1½ in. long and ⅜ in. wide, are inserted under each ring, starting at the upper ring and keeping the strips evenly spaced. Each ring can then be gently slid off. Broken pieces of an old hacksaw blade answer the same purpose, but if this method is used be careful not to let the teeth touch the piston. Also be very careful with the ring grooves as aluminium alloy is very easily chipped or scratched. Where a scraper ring is fitted on the piston skirt make a note as

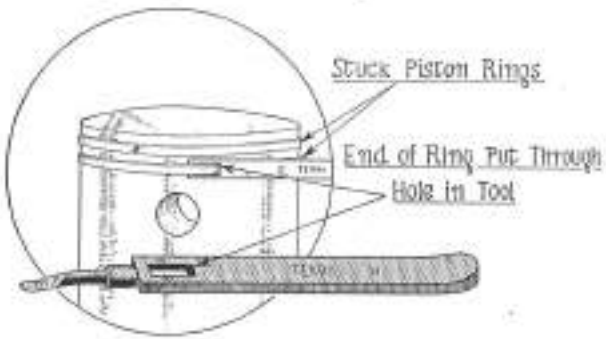

Fig. 8. A Handy Tool for Removing Stuck Piston Rings
This worth-while tool is made by Messrs. H. Terry & Sons, Ltd. of Redditch, and can be obtained for a very modest sum

to exactly how it is fitted to ensure its being replaced with the scraping edge the correct way up.

Stuck Piston Rings. Considerable difficulty may be experienced in removing piston rings which have become badly gummed up with burnt oil, and if it is obvious that new rings will be needed (i.e. if they have become scorched or otherwise damaged) it is a waste of time endeavouring to remove them intact. Snap them off and prise off the broken pieces with a thin-edged tool such as that shown in Fig. 8. On rare occasions the top ring becomes so carbonized up that it has to be broken off, and occasionally piston rings on an aluminium alloy piston become stuck due to a partial or complete piston seizure, and to free them it is necessary to remove the smearing over the edges of the rings from the lands between. To do this, use a very fine file and remove only the barest amount of metal with the utmost care. If the smearing is extensive, there is no satisfactory remedy except to scrap the piston and fit a new one.

Most cases of stuck piston rings, however, are due to carbon

deposits in the grooves (caused generally by loose rings), and the piston should be immersed and allowed to soak in a paraffin bath until the carbon has became softened. It is probable that even after this treatment some trouble will be experienced in removing the rings, and the author strongly advocates the use of a tool such as that shown in Fig. 8 to ease them off. After slipping one end of the ring through the rectangular hole, the pointed end should be run around the groove under the stuck ring until it is completely freed. Do not use a screwdriver or chisel or the groove edges are very likely to be damaged.

Cleaning and Refitting Rings. The piston rings are the main-guard of engine compression and must be full of spring and free in their grooves. The rings on examination should be polished around

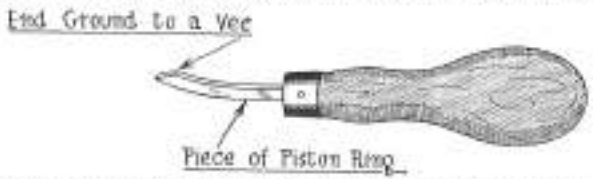

Fig. 9. A Home-made Tool for Cleaning Piston Ring Grooves

the whole of their surfaces, and if any ring has a brownish discoloration or a black patch on it, it indicates gas leakage and should be replaced by a new ring. Having removed the piston rings (it is considered good practice to leave them alone unless appreciable carbon deposits have formed in the grooves or the rings are gummed up), the piston should be washed in paraffin so that the extent of the carbon deposits can be readily seen. All carbon should be scraped from the backs of the rings, from the ends of the rings and from the ring grooves. Various proprietary scrapers are available for removing carbon deposits in the ring grooves and have the advantage that in one operation the carbon can be scraped from the three sides and corners of each groove.

Quite a good scraper can be made from a narrow wood chisel, but it must be of just the right size. It is also possible to make an excellent scraper by grinding the end of a small file or the end of a piece of broken piston ring which is, of course, of exactly the correct width. The piece of ring can then be mounted in a handle as shown in Fig. 9. Be exceedingly careful when scraping the carbon off not to injure the surfaces of the grooves or some loss of compression may follow and perhaps the piston may be irretrievably ruined. In addition to being free from carbon, the piston rings must be free to move in their grooves without much

up and down play (0·002 in.–0·003 in. in the case of new rings) and their slots should not exceed about $\frac{1}{32}$ in. A fair average gap for most engines is 0·003 in. per inch of piston diameter (see page 63).

After the carbon has been removed from the piston rings, both the rings and piston should again be cleaned in paraffin and wiped dry with a non-fluffy rag. The piston rings should be refitted in exactly the same position as they were originally, and before replacing them with the aid of strips of tin (Fig. 7) or by replacing the top ring first followed by the others, place a few spots of oil on the grooves. See that the piston ring slots are opposite each other. On a three-ring piston space the ring slots at 120 degrees, and on a two-ring piston space them at 180 degrees.

Decarbonizing Piston and Cylinder. When decarbonizing, it pays to do the job as thoroughly as possible because carbon deposits form less quickly on smooth and polished surfaces. With a flat scraper, such as a blunt screwdriver, remove every trace of carbon from the top of the piston crown, taking great care in the case of an aluminium alloy piston not to exert excessive pressure, otherwise the comparatively soft metal may be scratched deeply. Removal of the piston from the connecting-rod unquestionably facilitates thorough cleaning and it also enables the underside of the crown to be scraped and the piston rings, if necessary, removed and the grooves cleaned, as previously described. The author, however, would emphasize that it is quite unnecessary to touch the rings more often than about every 5000 miles and even then it is not advisable to remove them unless substantial deposits in the grooves are preventing the rings from doing their duty properly. Do not attempt to remove any carbon from the lands between the grooves. After decarbonizing the piston clean it all over with paraffin and then polish the top of the crown with emery cloth or metal polish in the case of cast-iron and aluminium alloy pistons respectively. Finally remove every trace of abrasive by wiping with a rag dampened in paraffin, and oil the piston before refitting it to the connecting-rod.

To decarbonize the combustion chamber turn the cylinder or cylinder head upside down and then scrape off all carbon deposits with a blunt screwdriver or other scraper. The job is greatly facilitated if the head is held securely and a good method of doing this is to screw an old sparking plug into the head and grip this with a vice. An even better method is to obtain a piece of hexagon steel bar about 5 in. long and get one end turned and threaded to fit the sparking plug hole. The bar can then be placed upright between the vice jaws as shown in Fig. 10.

When chipping off the carbon deposits from the combustion chamber of a side-valve engine without a detachable head a long

scraper must be used, and great care should be taken not to let the shank touch the highly polished sides of the cylinder. Avoid deeply scratching the walls of the combustion chamber. On most engines some carbon forms on the slight ridge which is usually found inside the cylinder barrel at the top of the piston stroke, and such deposits should be cautiously removed. Next clean up the inlet and exhaust ports with a suitable scraper (special bent scrapers are sold for this purpose) and remove all carbon from the valve heads, valve caps (where fitted), and sparking plug (see page 47). If the silencer is choked and causing back-pressure,

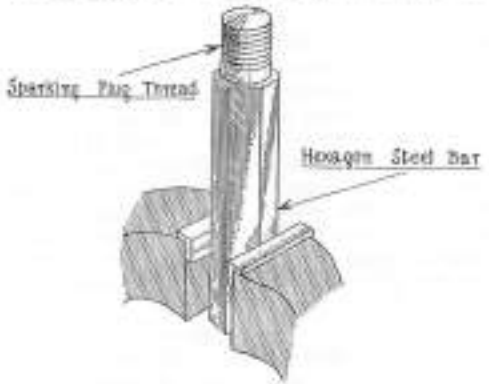

Fig. 10. A Useful Gadget for Holding the Cylinder Head while Decarbonizing

remove it and scour out all soot inside. After decarbonizing, wipe all the surfaces over with a rag dampened in paraffin. If the engine has a detachable cylinder head, it is a good plan to polish the combustion chamber with emery cloth and engine oil, but, if this is done, the greatest care must be taken afterwards to remove all emery particles. Another method of polishing the combustion chamber and ports is to use riflers, but this type of polishing is rather in the nature of a refinement than a necessity, except perhaps when tuning a sports engine for maximum speed.

GRINDING-IN THE VALVES

It is inadvisable to grind-in the valves more frequently than every alternate decarbonizing unless some loss of compression occurs due to poor seating. It should be remembered, however, that, if the valves really do need attention and are neglected, both the valves and their seats may become damaged and refacing

of the valves and recutting of the seats may be called for, an expensive operation.

If compression is good it should be possible to stand on the kick-starter of a motor cycle for about twenty seconds without the engine turning over compression. Gas leakage past the valves is usually accompanied by slight hissing when turning the engine over against compression and it should be possible to detect the noise on listening close to the ports. Overheating and loss of power are present while running. Poor compression, on the other hand, may be due to one of a number of possible causes such as a sticking valve, a weak or broken valve spring, insufficient valve clearances, a defective cylinder-head joint, leaky valve caps, a damaged sparking plug washer, faulty piston rings, or a worn

Fig. 11. Showing Why a Valve must not be Ground-in Excessively

The valve shown on the left is seating correctly, but that shown on the right has become "pocketed" due to too frequent or excessive grinding-in. "Pocketing" restricts the smooth and rapid entry and exit of gases past the valves and is detrimental to engine efficiency

piston and cylinder. Therefore, if loss of compression occurs, do not remove the valves immediately without taking other factors into consideration.

To Remove Side Valves. It is possible to remove the valves either with the cylinder in position or detached, but since removal of the cylinder enables the valves to be conveniently worked at on a bench or table, complete removal is advocated. First of all remove the valve caps (see page 14) or else take off the valve cover fitted to detachable head side-valve engines. To remove the valves it is necessary to compress the valve springs and withdraw the flat cotters (split collets on twin-cylinder engines) from the slots in the ends of the valve stems. An excellent valve spring compressor for this purpose is the Terry illustrated in Fig. 12A. To use this tool, place the hooked end over the top of the valve head and the forked end beneath the lower valve spring collar. Then lever each valve spring upwards by pressing down on the handle until the cotter can be pushed out. If stiff, gently tap it out, or pull it away with a pair of pliers. The valve spring, together with the two collars, can then be pulled off the valve

stem and the valve drawn out from above. Be careful after removing the inlet and exhaust valves not to mix them up (see below).

To Remove Overhead Valves. With the detachable cylinder head removed and the rocker-box or rocker standard assembly taken off, it is a simple matter to remove the valves with a valve spring compressor such as the Terry shown in Fig. 12B. On overhead-valve J.A.P. engines split collets are employed for anchoring the lower valve spring collars, and in order to remove the valves it

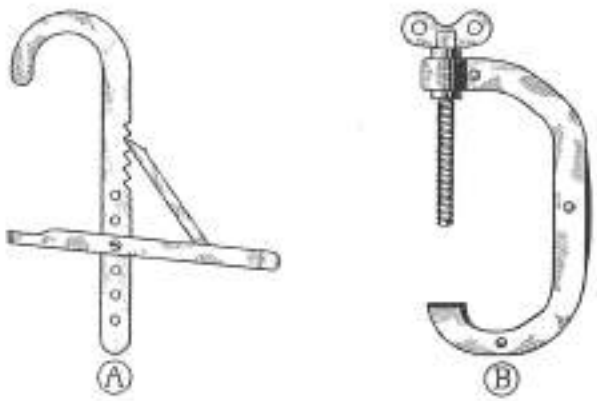

Fig. 12. Suitable Valve Spring Compressors for J.A.P. Engines

Both the tools illustrated are of Terry design. The lever type shown at *A* is suitable for side-valve engines and the screw type shown at *B* is for overhead-valve engines

is only necessary to place the forked end of the screw compressor under each lower valve spring collar and the pointed end of the screw in the centre of the valve head and screw up until the split collet can be removed and the collars and duplex springs taken off. Sometimes the collets are stiff and in this case tap them out. Before removing the valves take off the circlips (1932–38); be careful not to lose the hardened slip-on valve stem end caps.

Should no valve spring compressor be available, the following method can be employed for compressing the valve springs on side-valve or overhead-valve engines. Place some hard packing under the valve heads and place the cylinder or cylinder head so that the packing is flush with the bench. Then press down on the valve spring collars with a spanner or other suitable tool until

the split collets are released. 1932 and later engines have a circlip in addition to split collets and this must first be removed from the valve stem.

Having removed the valves, care should be taken not to mix them because, although theoretically on some engines the inlet and exhaust valves are interchangeable, each valve is individually ground on to its seat and must be kept on this seat only to ensure a gastight seal. It is usually possible to identify the valves easily by reason of the fact that the exhaust valve becomes more highly discoloured than the inlet valve. Clean the valves with paraffin and wipe them dry. Then carefully inspect the valve heads and stems for carbon deposits and scale which should be removed without scratching the valves. Finally, polish the valve stems lengthwise with some worn emery cloth and polish the heads and necks with metal polish.

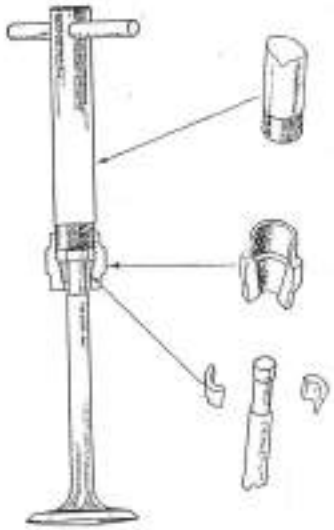

Fig. 13
J.A.P. Valve Grinding Tool for O.H.V. Engines

Test Valve Guides for Wear. It is not always realized that worn valve guides (especially a worn inlet guide) cause heavy petrol consumption, erratic slow running, and difficult starting. Before grinding-in the valves it is advisable to test the guides for wear by refitting the valves in the guides and trying to "rock" them sideways. If much wear is apparent, the guides should be renewed.

Grinding-in the Valves. Examine the bevelled valve faces and their seats carefully for pitting which must be removed by grinding-in. The mushroom-headed valves on J.A.P. side-valve engines have slots in their heads to fit a screwdriver or bit held in a brace, but the valves on the Standard, Sports, and "high cam-shaft" engines are not slotted and it is necessary to use a special valve-grinding tool. The tool shown in Fig. 13 is extremely handy and very simple to use. To grip the valve, place the split collet on the valve stem, slip the tool over it and tighten up the nut.

There are a number of good proprietary grinding pastes, such as Richford's, available, and these are often supplied in round tins

with two compartments, one having a fine grade paste, and the other a coarse paste which should be used only when the pitting is extensive or for making a preliminary rough cut. Fine carborundum or emery powder mixed with vaseline or engine oil makes a useful grinding paste, but the ready-made compound is preferable.

To grind-in a valve hold the cylinder or cylinder head firmly on a bench or in a vice (see page 24), and after cleaning both the valve seat and valve, smear with a piece of rag or the finger tip a thin film of grinding paste (coarse first if dealing with an exhaust valve) on the valve face and replace the valve in its guide minus the valve spring. Before inserting it, however, it is a good plan on side-valve engines to insert a small spring between the valve head and valve guide to avoid the necessity of frequently lifting the valve off its seat by hand in order to turn it round, which is necessary to avoid the formation of grooves or rings on the valve face while grinding-in.

When grinding-in, a steady pressure on the grinding tool is required and care must be taken not to rock the valve, particularly if the valve guide is somewhat worn. Rotate the valve about *a third of a turn* in one direction and then an equal amount in the opposite direction, pausing about every half-dozen oscillations to raise the valve from its seat and turn it one-third to a quarter of a revolution. Cease grinding-in when no "cut" can be felt (and the valve begins to "sing") and put some more paste on the bevelled edge of the valve face if after cleaning the valve in paraffin some pitting is still visible. Continue grinding-in until both the valve face and seat surfaces are bright over a considerable depth (line contact is not sufficient) and there are no pit marks left on wiping the paste off. Do not continue grinding-in after a good seating has been effected, because as has already been explained on page 26 excessive grinding-in eventually leads to the valves becoming "pocketed," which causes a considerable decline in power output. After grinding-in the inlet and exhaust valves wipe both the valves and their seats thoroughly clean with a paraffin- or petrol-soaked rag to ensure that there is absolutely no trace of any abrasive left.

Refitting Valves. After grinding-in the valves you should reassemble them in the cylinder head. Smear the valve stems with oil and replace them in their guides. Then refit the valve springs and collars, being careful not to mix up the upper and lower collars. Next compress each valve spring with the valve spring compressor and refit the split collet or cotter (first replace valve circlips on O.H.V.s). The application of a little grease to the lower part of the valve stem facilitates reassembly of O.H.V. engines, as this enables the split collet to stick on the valve stem

while compressing the springs. On O.H.V. engines do not forget to replace the hardened valve stem end caps, and if these are seriously worn, renew, otherwise side thrust will be imposed by the rockers on the valves and the guides will wear. On S.V. engines the valve caps (where fitted) may now be replaced.

After Reassembly. Where a detachable head is fitted, it is an excellent plan to test the seats by pouring some petrol into the ports and watching for leakage past the valves. Not the slightest sign of moisture should creep past the valves until after a considerable time has elapsed. If some petrol quickly gets past the valves it is sure proof that the valves have not been sufficiently ground-in and the remedy is (horrible thought!), remove and continue grinding-in. The ultimate test of good valve seating is engine compression.

Cleaning Cylinder Exterior. Rain and heat quickly cause the cylinder fins of an air-cooled engine to become rusty. This does not appreciably affect the running, but it becomes an eyesore, and to a small extent reduces heat radiation. To remedy this, clean the cylinder fins with a stiff brush soaked in paraffin, and afterwards paint the fins with cylinder black which can be obtained at any accessory dealer.

Refitting Piston and Cylinder. This should be done in the reverse order of dismantling. Smear both the piston and inside of the cylinder with engine oil and refit the piston the correct way round (page 21) on the connecting-rod, pushing the gudgeon-pin, which should also be oiled, home from the side where the circlip has been removed. Fit a new circlip on this side (unless you are sure the old one is perfect) and see that it beds down properly in the piston boss groove and is fully expanded. Remember that if a circlip "goes west" with the engine running you may have to put your hand in your pocket for a new piston and cylinder. Also see that the cylinder barrel spigot and mouth of the crankcase are scrupulously clean, and smear a little gold size on the cylinder base or crankcase face.

To replace the cylinder put the piston well down, space the rings properly (see page 21), hold the cylinder over the piston with one hand and offer the piston up to it with the other, squeezing the rings (without upsetting the position of the gaps) together until the complete piston enters the cylinder. Avoid putting any side strain on either the piston or connecting-rod. After seeing that the spigot beds down on the crankcase squarely and closely, tighten up the cylinder nuts finger-tight first and then securely with a spanner in a diagonal order. Even tightening is important, otherwise there is some risk of distorting the cylinder flange and preventing its bedding down properly on the crankcase.

Replacing Cylinder Head. It is important before replacing the cylinder head on O.H.V. engines and side-valve engines with a detachable head to see that the cylinder and head faces are quite clean and that the copper washer is perfect. Should the washer show any indications of "blowing" having occurred, it should be replaced by a new one or else annealed by heating it to a dull red and immersing in cold water. No jointing compound is needed but it is essential to see that the head beds down squarely on the cylinder barrel spigot. Having carefully replaced the head, tighten down the fixing bolts diagonally with the special spanner provided.

Reassembling Overhead Valve Gear. This is quite straightforward and should present no difficulty. First turn the engine over until the piston is in a position such that both cams are in the "neutral" position and then proceed to replace the various parts in the reverse order of dismantling. On 1927–8 engines with open type rocker gear replace the rockers by screwing the spindles into the rocker standards and secure with the lock-nuts and split-pins. By levering the valves open, the push-rods can then be located between the ball ends of the rocker-arm adjusters and the cam levers.

In the case of 1929 and subsequent O.H.V. engines refit the complete rocker-box with the two securing bolts and replace the push-rods and covers, levering each valve open and pressing down on the push-rod cover against the lower spring until it fits into the rocker-box spigot. Make sure that both push-rods are snugly located in the cam lever recesses and that the loose balls in the upper push-rod ends engage the cupped rocker-arm adjusters. The oil pipes to the back of the rocker-box and the pipes to the valve guides (where fitted) may now be reconnected and the rocker-box end cover replaced. Before doing this, however, the valve clearances (see page 34) will require adjusting.

The rocker-box and cylinder head are integral on the "high camshaft" engines and can be replaced together, and the four bolts done up tightly. Flat-base tappets are provided on these engines and with the tappets slackened off it is a simple matter to refit the push-rods. See that the gland nut at the base of the telescopic push-rod cover tube is firmly retightened after final adjustment of the tappets (see page 34).

Completing Reassembly. Replace the sparking plug, carburettor petrol pipe, exhaust pipe(s), and also the petrol tank if this has been removed. Renew any washers whose condition is doubtful, and before refitting the plug see that it is clean and properly adjusted (page 47). On side-valve engines refit the valve covers and on overhead-valve engines the valve spring covers (where fitted). On "high camshaft" engines reconnect the exhaust valve lifter wire at the rocker-box and if necessary adjust the cable stop

screw (page 38). The engine is now again ready for active service and it should prove very much more lively and flexible than it was prior to decarbonizing and grinding-in the valves. After a short mileage has been covered, go over the various engine nuts and bolts with a spanner and tighten any which can be turned the slightest fraction. Also recheck the valve clearances and adjust the tappets or rocker-arm adjusters if necessary.

Fig. 13a. Before Replacing the Plug Clean the Points with a Penknife or Wire Brush

CHAPTER III

ADJUSTMENTS AND OVERHAUL

In this chapter it is proposed to deal with various routine adjustments and overhauling other than matters concerned with lubrication and decarbonizing which have been dealt with in the preceding two chapters.

A turn of a nut in time with a spanner will often save the engine "packing up" by the roadside, and it is a good plan to check over the nuts for tightness at intervals and also to check up on the various mechanical adjustments at regular periods and rectify if necessary. Most of these adjustments are really very simple and require only a little patience and common sense. But do not wait until the engine cries out for adjustment!

VALVE CLEARANCES

Adjustment is not often called for except in the case of a new engine where the valves tend to bed down for a time. Owners of new machines are therefore advised to check the clearances every few hundred miles. After decarbonizing and grinding-in the valves the clearances should always be checked.

To Adjust Tappets (S.V. Engines). On all side-valve engines, including the new 250 c.c. model, the correct tappet clearances are 0·004 in. for the inlet valve and 0·006 in. for the exhaust valve. In every case the clearances should be checked and if necessary adjusted with the engine cold. To check the clearances, remove the valve cover (where fitted), turn the engine over until both valves are fully closed, and then insert a feeler gauge of the correct thickness between each tappet head and foot of the valve stem (Fig. 14). If the clearance is not as it should be, loosen the lock-nut *A* and then screw the tappet head *B* up or down with a spanner until the correct clearance is obtained. To prevent the tappet itself from rotating while making the adjustment, hold the hexagon *C* with another spanner. Then retighten the lock-nut securely and again check the tappet clearance. The clearances in the case of both inlet and exhaust tappets should be adjusted as finely as possible.

If the Tappet Head is Worn. Continuous hammering of the valves on the tappet heads (accentuated by running with excessive clearances) causes a recess to be gradually formed on each tappet head and this may render it impossible to check the tappet

clearances accurately. The remedy is to renew the tappet head or else to grind its surface until it is dead flat. Wear of the overhead rocker-arm pads on O.H.V. engines also makes accurate checking of valve clearances very difficult and the remedy in this case also is to grind the pad or fit a new rocker.

To Adjust O.H. Rockers (1927–8 Engines). Tappets and ball-ended rocker screws have been employed on some 1927–8 J.A.P. Standard and Sports engines, but on the majority of O.H.V. engines direct acting push-rods with adjustable rocker screws are fitted. Where tappets are provided it is only necessary to loosen the lock-nuts and adjust the ball-ended rocker screws after first making sure that both valves are fully closed. The correct clearance for both the inlet and exhaust valves is 0·002 in. with the engine cold and this should be measured with a feeler gauge placed between the overhead rocker-arm pads and the valve stems or valve stem end caps (where fitted). The feeler should just "go" without binding.

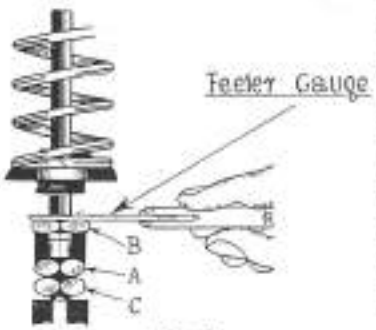

Fig. 14
Checking Tappet Clearance on a S.V. Engine

Tappets are also provided on the new "high camshaft" engine, a part-sectioned drawing of which (with rocker-box cover removed) is shown in Fig. 15. As may be seen, rollers are fitted to the ends of the overhead rocker-arms and the valve clearances should be checked by slipping a suitable feeler gauge between the rollers and valve stem end caps after removing the rocker-box cover. With a cold engine the clearance for both valves should be 0·005 in. In order to gain access to the tappet heads and lock-nuts, unscrew the gland nut at the base of the large push-rod cover tube and press the telescopic portion upwards until the tappets are exposed. After making the necessary tappet adjustment see that the tappet lock-nuts and also the gland nut are firmly retightened. On "high camshaft" engines the tappets are prevented from turning while making the adjustment by an internal plate.

To Adjust O.H. Rockers (1929 Onwards). On overhead-valve engines with the direct-acting type of push-rod having no tappet the valve clearances should be checked with the engine *cold* by applying a 0·002 in. feeler gauge between the valve stem end caps and overhead rocker pads after removing the valve spring covers

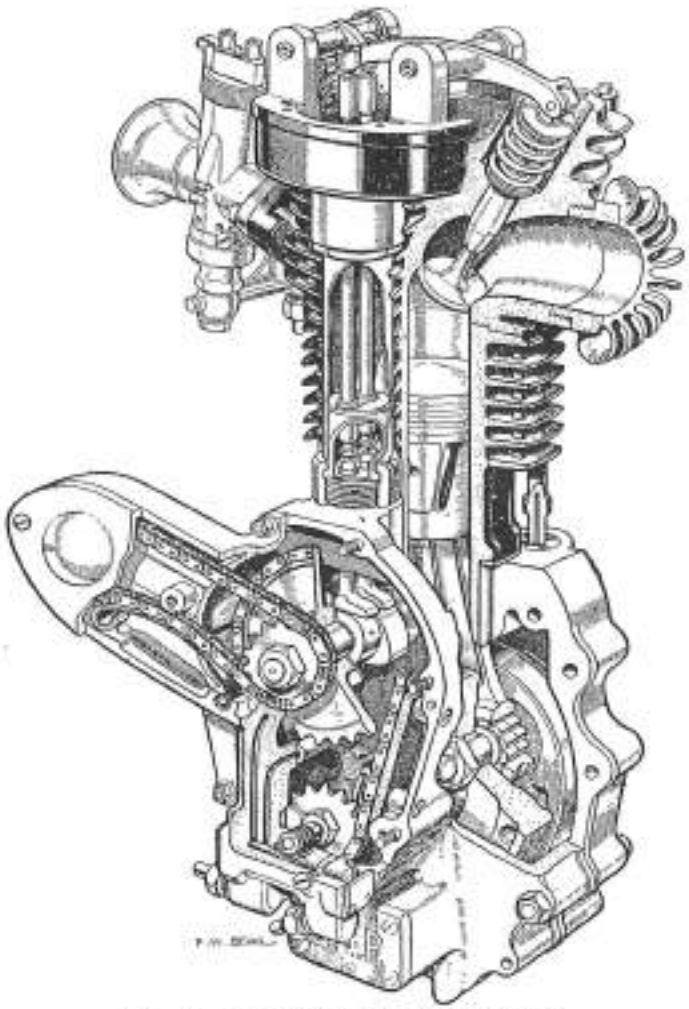

Fig. 15. 1938 "High Camshaft" Engine
Showing tappet adjustment and other details. The rocker-box cover has been removed
(From "The Motor Cycle")

(where fitted). To adjust the clearances it is necessary to remove the rocker-box cover and then after loosening each lock-nut (Fig. 16) to screw in or out with a spanner applied to the flats above the rocker-arm the adjuster screw into whose cupped base the loose ball at the top of the push-rod fits. Afterwards retighten the lock-nuts, again check the clearances, and refit the rocker-box and valve spring covers.

How to Take Up End Play in Rocker-Box. To ensure precise and therefore efficient action of the valve mechanism on overhead-valve engines it is important that there should be no appreciable end play of the rockers in the rocker-box. Should end play

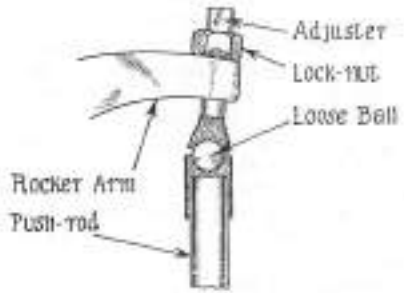

Fig. 16. Valve Clearance Adjustment Provided on Most O.H.V. Engines

exceeding $\frac{1}{64}$ in. develop after a considerable mileage has been covered, it may readily be taken up in the following manner. Remove the rocker-box from the cylinder head and take off the end cover. Then unscrew the four ¼ in. clamping nuts on the top of the rocker-box and, holding the rocker-box face downwards, deliver a sharp blow on the face at each end. This should cause the needle roller races (see Fig. 17) to move outwards slightly and stand proud to the face of the rocker-box. Now screw down the four ¼ in. clamping nuts finger-tight, carefully replace the end cover, and tighten down the lever nut on the outside of the cover. Two small pads on the inside of the rocker-box cover press against faces machined on the rocker-arm bosses and, therefore, should the bearing races have moved outwards too far when tapping the face of the rocker-box as previously described, the act of re-tightening the lever nut should locate them correctly, provided the four clamping nuts are done up only finger-tight. If necessary, tap the rocker-box cover gently. Finally retighten the clamping nuts very securely and see that the lever nut is locked home so that it is off vertical 30 degrees or more to the right. From previous

remarks it will be readily appreciated that when testing for end play of the overhead rockers the rocker-box cover must be kept tight against the face of the rocker-box.

Exhaust Valve Lifter Adjustment. On all except the "high camshaft" J.A.P. engines the exhaust valve lifter is screwed on to the left-hand side of the timing case and details of its design and method of working are clearly shown in Fig. 18. The return spring as may be seen is situated at the base around the rod to the arm on the cam spindle crank and as regards adjustment

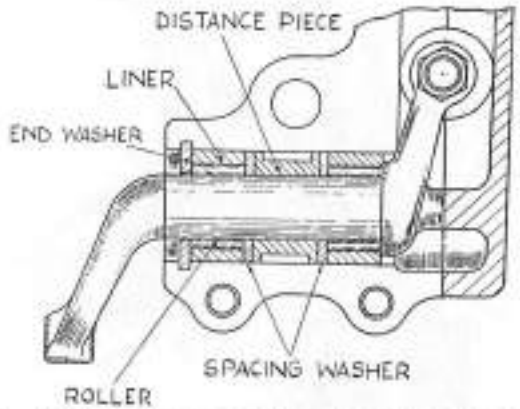

Fig. 17. Showing Method of Mounting Overhead Rockers in Rocker-box

The above arrangement has been used since 1929. One-piece rockers with needle roller bearings are fitted

it is necessary to keep the adjusters *B* adjusted so that the resistance of the spring is felt immediately the exhaust valve lifter lever (at the handlebars) is operated. No backlash other than that provided in the exhaust valve lifter mechanism itself is needed.

On early type J.A.P. engines it is necessary to raise the exhaust valve lifter from the timing case before removing the cover, but on later engines this is quite unnecessary. Should it be necessary to detach the Bowden cable from the valve lifter, this can be done very easily in the following manner. Pull up the Bowden adjusters *B*, together with the member *C* into which the upper adjuster screws, until the knurled collar *F* is released, and remove the collar. Then slide the outer spacing sleeve *E* upwards over the wire until the wire nipple *A* can be slipped out of the slot in the brass yoke piece, which frees the cable completely.

On the "high camshaft" engines an entirely different design of exhaust valve lifter is fitted on the rocker-box cover as may be seen in Fig. 19. An unusual feature is that the Bowden wire and not the casing is anchored to the cylinder head at *A*. The exhaust lifter return spring comprises a spring-loaded plunger situated below the lever arm attached to the rocker-box cover. It is undesirable to maintain any backlash at the operating lever (on the handlebars), and any adjustment required to take up slack can be effected by loosening the lock-nut *B* and turning the adjustable casing stop *C* the necessary amount.

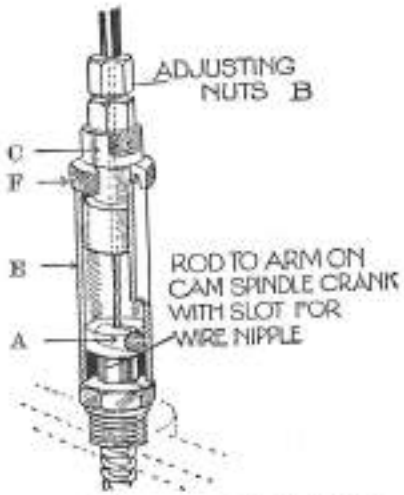

Fig. 18. Details of the Exhaust Valve Lifter Used on All Except "High Camshaft" Engines

CARBURETTOR TUNING AND MAINTENANCE

Mixture Too Rich. A correct mixture gives the best all-round results. If the open exhaust port of an engine running on a correct mixture is observed, it will be noticed that the flame is of a *whitish-blue* colour and very small. If the mixture is too rich more power may be obtained than where the mixture is correct and combustion complete, but the slight increase in power output is accompanied by some wastage of fuel and the exhaust is apt to be dirty and contains a considerable proportion of poisonous carbon monoxide gas (invisible). The exhaust flame (at an open port) is usually of a characteristic *yellow* colour. In the event of the mixture being very rich, loss of power develops, carbon deposits form rapidly, fuel consumption becomes very excessive, and general sluggishness in running becomes manifest, accompanied by a tendency for black smoke to issue from the exhaust, especially when the throttle is quickly opened. This is due to fine carbon deposits forming and being blown out from the combustion chamber. Where the mixture is very rich a slight closing of the air lever is apt to choke the engine. An over-rich mixture sometimes causes a tendency for eight-stroking and if the mixture

is very rich the speed of the engine does not increase beyond a certain point in the throttle opening. Misfiring may occur. Possible causes of an excessively rich mixture are—

1. Incorrect carburettor adjustment (see page 41).
2. Flooding of the carburettor (see Fig. 20).
3. Sticking of the air slide.
4. Faulty control adjustment.

A Weak Mixture. A rather weak mixture provides the most economical running and a clean exhaust, but the power output and maximum speed are not so good as where the mixture is correct or a little rich. The colour of the exhaust flame is *light blue*. Should the mixture be very weak, the power output is poor, overheating is apt to occur, slow running is bad, misfiring may arise and the general performance of the engine is sluggish, accompanied usually by some popping back in the carburettor and hesitation in picking up which disappears as the air lever is closed slightly. Quite apart from the question of putting up with indifferent engine performance, it is most unwise to continue to run an engine on a weak mixture which has a slow rate of combustion and is still burning when ejected past the exhaust valve. Slow combustion which also occurs with an over-rich mixture is liable to cause overheating and damage the exhaust valve and its seat, and also to ignite the incoming mixture thereby causing popping back. Possible causes of a weak mixture are—

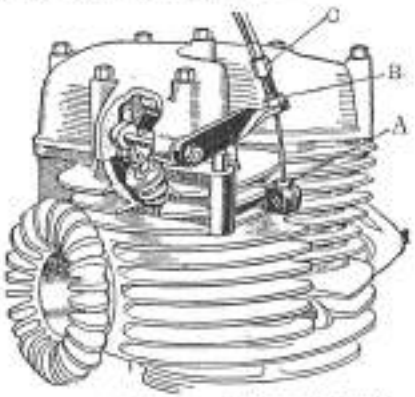

Fig. 19. Exhaust Valve Lifter on "High Camshaft" Engine
(From "The Motor Cycle")

1. Incorrect carburettor adjustment (see page 41).
2. Air leaks at inlet valve guide, carburettor slides, butterfly valve, or induction pipe.
3. A choked air intake gauze.
4. Loss of compression (see page 26).
5. A choked jet, filter or other stoppage in carburettor.
6. A stoppage in the petrol pipe.
7. Badly adjusted carburettor controls.

Difficult starting and poor slow running is sometimes caused through badly seating valves or some defect in the ignition system such as a dirty or incorrectly adjusted plug (see page 47), a contact-breaker needing attention, or excessively advanced ignition timing; it is therefore wise to give the ignition system "the once-over" before suspecting faulty carburation.

Defective Float Chamber Needle. Dirt or grit may become lodged

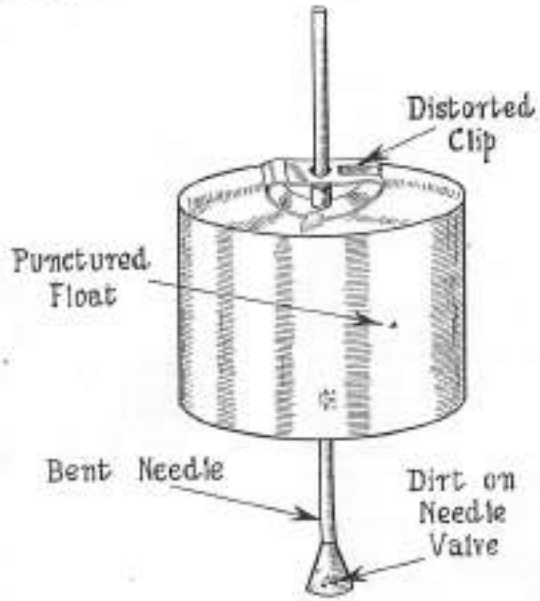

FIG. 20. SOME POSSIBLE CAUSES OF CARBURETTOR FLOODING
Too high a level at the jet may also cause flooding. It should be about $\frac{1}{16}$ in. below the orifice

between the float chamber and the needle valve, in which case the symptoms vary from mild flooding of the carburettor to profuse flooding. The remedy is to clean the needle seating and also thoroughly clean the inside of the float chamber. If the needle is bent, it should be replaced, but if it is seating badly the needle valve and seat should be polished by pulling the valve against its seat and rotating the needle with the fingers until a bright line contact is obtained, care being taken to keep the needle quite vertical.

Petrol Blown from Air Intake. This trouble, known as "popping back," is sometimes accompanied by a small blue flame, and loss of power, overheating, heavy fuel consumption and a characteristic noise are other objectionable symptoms. In the event of the carburettor catching on fire, instantly turn off the petrol and open the throttle wide so as to use up the petrol in the float chamber. Very slight "popping back" normally occurs on some high-efficiency engines and can be disregarded. The trouble may be due to a weak mixture which should be cured by strengthening the mixture by remedying air leaks, altering the petrol level, tuning the carburettor, or improving compression, according to what is at the root of the trouble.

If the inlet valve spring is weak, renew it, and if the ignition timing is excessively advanced, retard it slightly.

Tuning the Amal Carburettor. The standard setting is usually entirely satisfactory, but better results and more power may *sometimes* be obtained by the use of a slightly larger main jet or by making other adjustments. Various sized jets are obtainable from Amal spare parts stockists, Messrs. Amal, Ltd., or from the motor-cycle manufacturer.

Should the setting of this instrument not give entire satisfaction for particular requirements, there are four separate ways of rectifying matters as given herewith, and the adjustments should be made in this order: (*a*) Main jet ($\frac{3}{4}$ to full throttle); (*b*) pilot air adjustment (closed to $\frac{1}{8}$ throttle); (*c*) throttle valve cut-away on the air intake side ($\frac{1}{8}$ to $\frac{1}{4}$ throttle); and (*d*) needle position ($\frac{1}{4}$ to $\frac{3}{4}$ throttle). The diagram (Fig. 22) clearly indicates the part of the throttle range over which each adjustment is effective.

(*a*) To obtain the correct main jet size, several jets should be experimented with, and that selected should be the *one which gives maximum power and speed* on full throttle with the air lever three-quarters open. If maximum speed is the chief consideration, the jet size should be selected with the air lever fully open. For touring, to determine whether the jet is too large or too small, with throttle fully open, gradually close the air lever. If an increase in power is noticed, the jet is on the small size. If, however, when the air lever is opened fully an increase of power is obtained, the jet is too large.

(*b*) To weaken slow-running mixture, screw pilot air adjuster outwards, and to enrich, screw pilot air adjuster inwards.

Screw pilot air adjuster home in a clockwise direction. Place gear lever in "neutral." Slightly flood the float chamber by gently depressing the tickler. Then set magneto at half advance, throttle approximately one-eighth open, close the air lever, start the engine, and warm up. After warming up, reduce the engine revolutions by gently throttling down. The slow-running mixture will

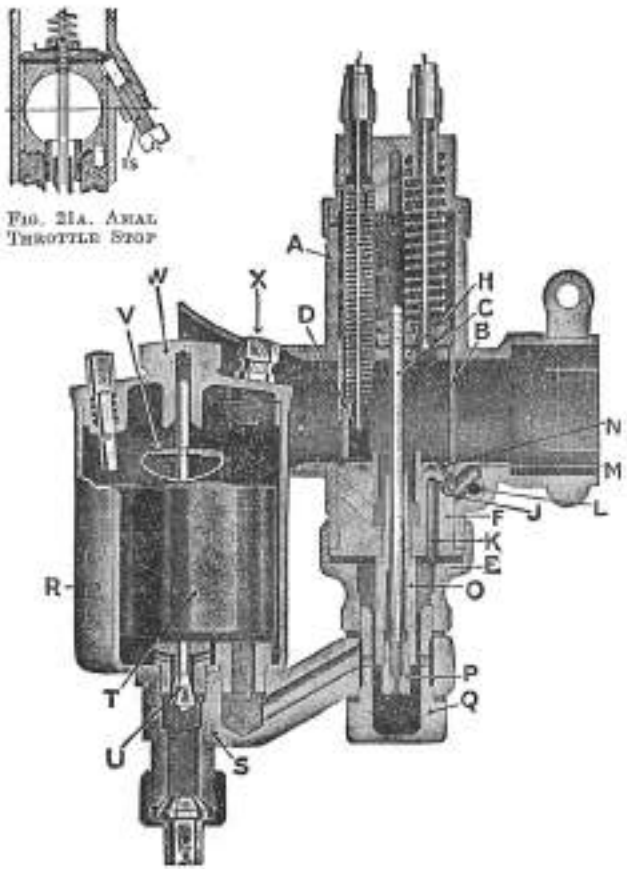

Fig. 21a. Amal Throttle Stop

Fig. 21. Sectional View of Amal Semi-automatic Two-lever Carburettor Fitted on Many J.A.P. Engines

A flange fixing is generally used on O.H.V. engines and a clip fixing as shown on S.V. engines. On some J.A.P. engines the Bowden carburettor (see Fig. 23) is fitted

prove over-rich unless air leaks exist. Very gradually unscrew the pilot jet adjuster. The engine speed will increase, and must again be reduced by gently closing the throttle until, by a combination of throttle positions and air adjustment, the desired "idling" is obtained. It is occasionally necessary to retard the magneto completely before getting a satisfactory tick-over, especially when early ignition timing is used. If it is desired to make the engine idle with the throttle quite closed, the position of the throttle valve must be set by means of the throttle stop screw, the throttle lever during this adjustment being pushed right home. Alternatively, if the screw is adjusted clear of the throttle valve,

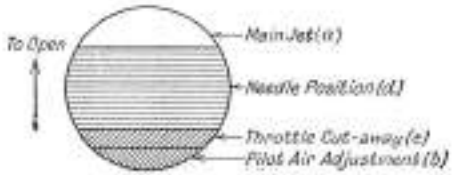

Fig. 22. Range and Sequence of Amal Adjustments

the engine will be shut off in the normal way by the control lever.

(c) Given satisfactory "tick-over," set the magneto control at half-advance with the air lever fully open. Very slowly open the throttle valve, when, if the engine responds regularly up to one-quarter throttle, the valve cut-away is correct.

A weak mixture is indicated by spitting back through the air intake, with blue flames, and hesitation in picking up, which disappears when the air lever is closed down. This can be remedied by fitting a throttle valve with less cut-away. A rich mixture is shown by a black, sooty exhaust, and the engine falters when the air valve is closed. The remedy for this is a throttle valve with greater cut-away. Each Amal valve is stamped with two numbers, the first indicating the type number of the carburettor, and the second figure the amount of cut-away on the intake side of the valve in sixteenths of an inch, e.g. 6/4 is a type 6V, with a $\frac{4}{16}$ in. —i.e. a $\frac{1}{4}$ in. cut-away.

(d) Open air lever fully and the throttle half-way. Note if the exhaust is crisp and the engine flexible. Close the air valve slightly below the throttle, when the exhaust note and engine revolutions should remain constant. Should popping back and spitting occur with blue flames from the intake, the mixture is weak, and the needle should be slightly raised. Test by lowering the air valve gently. The engine revolutions will rise when the air valve is

lowered slightly below the throttle valve. A 0-1065 is a standard needle.

If the engine speed does not increase progressively with raising of the throttle, and a smoky exhaust is apparent with heavy laboured running, and tendency to eight-stroke, the mixture is too rich and the needle should be lowered in the throttle valve. Having found the correct needle position, the carburettor setting is now complete, and it will be found that the driving is practically automatic once the engine is warmed up. For speed work the main jet may be increased by 10 per cent, when the air lever should be fully open on full throttle. If extreme economy is desired, lower the needle one groove farther after carrying out the four above-mentioned tests.

Maintenance of the Amal Carburettor. Periodical cleaning is necessary to maintain efficient functioning of the carburettor, and should be carried out in the following sequence—

Disconnect petrol pipe. Unscrew holding bolt *Q* (Fig. 21) and remove float chamber complete. With box or set spanner, slacken the mixing chamber union nut *E*. Mixing chamber complete may now be removed from engine, either by unscrewing the clip pin or flange screws holding the carburettor. Unscrew mixing chamber lock ring, and pull out throttle valve, needle and air valve. Remove main jet *P* and needle jet *O*. Mixing chamber union nut *E* may then be removed and jet block complete pushed out. If this is obstinate, tap gently, using a wooden stump inside the mixing chamber. Unscrew float chamber cover *W* and slacken lock screw *X*. Withdraw the float by pinching the clip *V* inwards, and at the same time pull gently upwards.

Generally it is sufficient to wash all parts in clean petrol, but if the carburettor has had extended service, check the following—

(*a*) Float Chamber Needle *U*. If a distinct shoulder is visible on the point of seating, renew this as soon as convenient.

(*b*) Throttle Valve. Test in mixing chamber, and if excessive play is present it is advisable to renew this without delay.

(*c*) Throttle Needle Clip. This part must securely grip needle. *Free rotation must not take place*, otherwise the needle groove will become worn and necessitate a new part being fitted. *Be sure to refit the clip in the same groove.*

(*d*) Jet Block. If trouble has been experienced with erratic "idling," ascertain by means of a fine *bristle* that the pilot jet *J* is clear, and that the pilot outlet *M* in the mixing chamber is unobstructed.

The Bowden Carburettor. This instrument which has a butterfly throttle is made in two types. On type A the starting device is controlled from the handlebars by Bowden cable and on type B

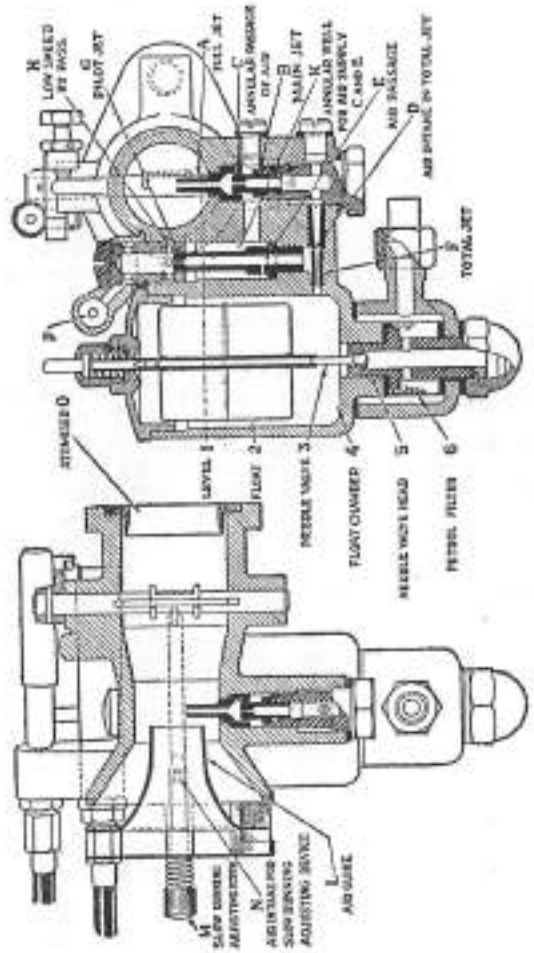

Fig. 23. Sectional Views of Bowden Carburettor
Every Bowden carburettor is supplied with two spare main jets

there is a knob control on the carburettor itself. The action of the carburettor is entirely automatic, the handlebar mixture control being brought into use for starting purposes only. Four jets are provided, namely (*a*) the pilot jet, (*b*) the main jet, (*c*) the total jet, (*d*) the full jet. It should be particularly noted that jets (*c*) and (*d*) are definitely fixed to suit the engine and must not be altered.

Tuning for Slow-running (Type A). To tune for easy starting from cold, first of all screw the adjusting screw *M* (Fig. 23) right in. Next turn the twist-grip very slightly (about $\frac{1}{4}$ in.) so as to cause a big suction over the pilot jet *G* when the engine is started. Move the mixture control lever to the closed or starting position (unless the engine is warm), thereby closing the air intake situated at *P*. The effect of closing this air passage is to enrich the mixture delivered by the pilot jet *G* considerably, and a rich mixture is needed for starting from cold. Now retard the ignition lever and if the air temperature is very low, flood the carburettor (do not do so otherwise). The engine should then be kicked over.

After the engine has sprung into life, warm it up at a moderately fast pace and then move the mixture control lever to the normal position (which is open) and close the throttle right down by means of the twist-grip. Having done this the engine revolutions should be slowly reduced by unscrewing the throttle stop screw until a fair tick-over is obtained. The mixture will be found in most cases to be on the rich side, and eight-stroking and/or "hunting" may occur.

To Weaken the Mixture. In the event of the mixture being too rich and good slow running unobtainable, unscrew the adjusting screw *M* so as to cause an air intake at *N*, the effect of which is to weaken the mixture and cause more even running and absence of "hunting." The engine revolutions will also increase slightly. It should be borne in mind, however, that it is futile to unscrew the screw *M* more than is necessary to uncover fully the air intake *N*.

Pilot Jet Size. Should a good tick-over not be obtained when the air intake *N* is fully opened, fit a slightly *smaller* pilot jet and screw in the adjusting screw *M* until perfectly even running results. Let us suppose that the engine stalls when the adjusting screw *M* is screwed fully home with the mixture control lever moved to the normal position. This indicates that the mixture is excessively weak and a *larger* pilot jet should be inserted.

It should be noted that on some models the location of the screw *M* is different from that shown in the sectional view of the type A carburettor, the screw being situated on the side of the carburettor opposite the throttle, and working in exactly the same way. This arrangement, however, causes the air intake *N* to

become superfluous and it is replaced by a similar air intake on the body of the side air adjusting screw device. To obtain good tick-over, adjust the throttle stop screw carefully.

To Tune for Power (Types A and B). Most motor cyclists are not so well blessed with £ s. d. that they can afford to get "power at any price," and therefore the smallest main jet should be fitted which gives plenty of power. If a road test reveals power in abundance, try the effect of fitting a main jet one size smaller. No loss of power may result and a considerable gain in miles per gallon may be obtained.

If the power output is none too good, try the effect of replacing the existing jet by one a size larger; it is highly probable that this will give maximum power combined with a low fuel consumption. When reducing the main jet size in order to obtain more economical running, bear in mind the possibility of too weak a mixture causing overheating and thereby upsetting the carburation.

CARE OF IGNITION COMPONENTS

Plugs which give excellent results are the Lodge and the K.L.G. Some J.A.P. engines take an 18 mm. size but most engines made since 1934 take a 14 mm. plug. For Standard S.V. or O.H.V. engines where the plug size is 18 mm., a Lodge HI is suitable, but where a 14 mm. plug is required a Lodge HI4 should be fitted. For racing engines a special high heat resisting plug such as a Lodge BR29 is needed. The plug manufacturers are willing to advise on the choice of plugs for special purposes.

Keep the Plug Gap Correct. Even the most expensive plug is not absolutely proof against the terrific heat of combustion, and the electrode points gradually burn away with the result that the gap between them becomes gradually enlarged. It is therefore advisable every few thousand miles, or whenever engine trouble develops, to remove the plug and check the gap at the electrodes with a feeler gauge, and if necessary bring the points closer together by exerting pressure on the *outer* electrode. With magneto ignition models, where the voltage depends to some extent on engine speed, if an excessive gap exists, difficult starting is likely to arise. With coil ignition models it is not so likely as the h.t. current is of practically constant voltage. For magneto and coil models the correct gap is about 0·015 in.–0·020 in. and 0·025 in. respectively.

Clean It Frequently. The plug is liable to become oiled up (particularly during the running-in period), sooty or carbonized, and more often than not a combination of all three. Fortunately it is easy to clean, and as a dirty plug immensely affects engine performance you should make a habit of removing the plug fairly frequently and cleaning it. If the plug is not very dirty it is

usually sufficient merely to brighten up the electrodes where the spark occurs with the aid of a penknife. If the plug is very dirty it should be cleaned with petrol and a wire brush, both inside and outside. Special plug cleaners are available. To remove really thick deposits the plug should be dismantled, but if this is done see that the gland nut is firmly retightened. All deposits of carbon and soot must be completely removed. Examine the insulation for signs of cracks or flaws.

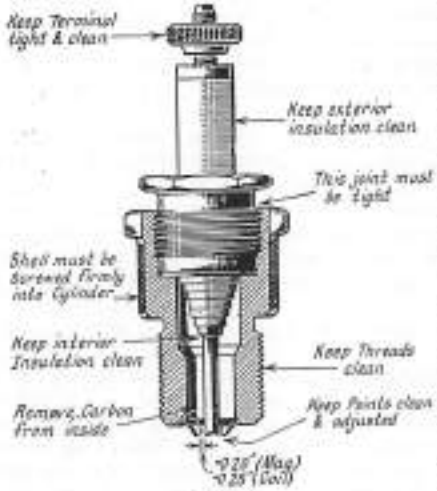

Fig. 24

Plug Maintenance at a Glance

How to Test a Plug. If you have a neon tube plug tester it is only necessary to watch the flash in the little window of the tester. But if you have not got such a gadget, remove the plug with the h.t. lead attached, clean and adjust it as described above if necessary, and lay it on the cylinder head with the terminal clear and note whether it sparks O.K. when the engine is rotated with the kick-starter. The spark though barely visible in broad daylight should be distinctly audible. On a twin-cylinder J.A.P. engine to determine which plug is faulty, short each in turn with a wooden-handled screwdriver with the engine running. As soon as the good plug is shorted the engine will stop or run extremely badly.

Contact-breaker Maintenance. A magneto, "Magdyno," "Maglita," or dynamo is best left well alone if it continues to function satisfactorily, but about every 1000–1500 miles the contact-breaker cover should be removed and the contact-breaker carefully inspected and, if necessary, adjusted. Contact-breakers (see Figs. 25–27) are broadly speaking of two types: (*a*) the stationary type in which the contacts and rocker-arm do not rotate, and (*b*) the rotating type in which the whole contact-breaker revolves. Possible sources of contact-breaker trouble are—

1. Sluggish action of the rocker-arm.

2. Incorrect adjustment of the contacts.
3. Pitted contacts.
4. Dirty or loose contacts.
5. Incorrect timing of the "break."

Sluggish Action. Correct adjustment and maintenance of the contact-breaker is most important. When the contacts are fully closed (i.e. when the rocker-arm heel or pad leaves the cam ring or cam) the fixed and adjustable contacts should be pressed firmly together by means of the spring. Sticking of the rocker-arm

Fig. 25

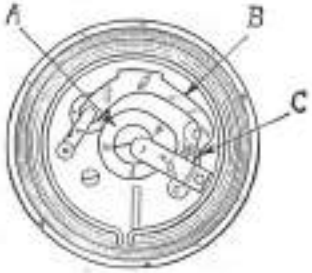

Fig. 26

Rotating Type (Lucas) and Stationary Type (Miller) Contact-breakers

On the rotating type contact-breaker (left) the complete contact-breaker revolves, the rocker-arm being actuated by the stationary cam ring. On the stationary type only the cam revolves. At *A*, *B*, *C* are shown the cam, rocker-arm, and contacts respectively

on its pivot prevents a smart make-and-break and may give rise to erratic running of the engine. If the rocker-arm bush is of metal, polish and slightly oil both the rocker-arm bearing and the pivot pin, but if the bush is of fibre it should not be oiled; carefully ease it with emery cloth or a very fine round file. In damp weather fibre bushes sometimes swell slightly and oiling only makes matters worse. A dodge which often works is to rub the inside of the rocker-arm bush with the head of a live safety match. Should the contact spring break, a sudden and complete engine stoppage occurs and the remedy is to replace the spring or make a temporary repair with a small rubber band. Any sign of rusting on the contact-breaker spring should be seen to as breakage is sometimes due to gradual rusting.

In the case of the contact-breaker on a Lucas "Maglita," examine the plunger spring and control occasionally as rusting

here may cause binding of the control and sticking of the tappet in its guide. On the stationary type of contact-breaker (e.g. Miller) a little vaseline smeared on the cam is helpful and reduces wear on the rocker heel. For notes on lubrication see page 13.

The Correct Gap at the Contacts. It is advisable about every 1000 miles to remove the contact-breaker cover and check the gap between the fixed and adjustable contacts (with the contacts wide open) and make an adjustment if the gap varies *considerably* from the thickness of the feeler gauge provided on the contact-breaker spanner. In the case of the Lucas "Magdyno" or Miller "Magdynamo" the correct gap is 0·012 in. On the Lucas "Maglita" the correct gap is 0·010 in., and this applies also to the contact-breaker fitted on the Lucas E3E dynamo which is specified on many coil ignition models. Where a Miller dynamo is concerned (coil ignition) the correct gap is 0·018 in. to 0·020 in. The correct gap for the Lucas and modern M-L magnetos is the same as for the magneto portion of the "Magdyno."

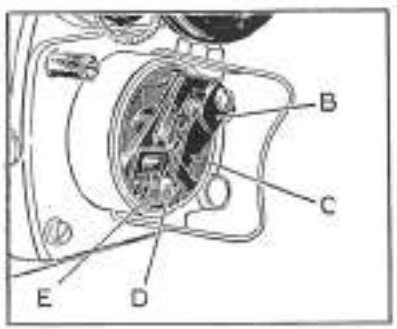

Fig. 27. Face Cam Type Contact-breaker Used on Latest Lucas "Magdynos" and Magnetos

B = Backing spring
C = Contact spring
D = Screw carrying lubricating wick
E = Contacts

It should be borne in mind that an excessive gap between the contacts does two things: (*a*) it reduces the period during which the primary circuit is closed; (*b*) it advances the ignition timing. Insufficient clearance may not only cause misfiring but is apt to cause pitting of the contacts due to sparking across them. Adjustment, however, is seldom called for provided the contacts are kept clean and free from oil (most important).

To Adjust the Gap. Turn the engine round slowly by hand until the contacts are wide open, and then with the small contact-breaker spanner loosen the lock-nut securing the adjustable contact and turn the contact screw until the feeler gauge on the spanner just enters without friction. Afterwards see that the lock-nut is securely retightened. This method of adjustment is applicable to most contact-breakers, but in the case of the Lucas E3E contact-breaker (a stationary type) the adjustment is made by loosening the screw holding the plate on which the stationary

contact is mounted and moving the plate until the correct gap between the contacts is obtained.

Cleaning the Contacts. It is of vital importance *always* to keep the contact-breaker scrupulously clean and not to allow the slightest trace of oil to get on the contacts, otherwise they are very likely to become burnt and pitted. Bad pitting may also arise through a faulty condenser or, in the case of coil ignition models, loose battery connexions. Healthy contacts present a grey frosted appearance and their condition should be carefully noted from time to time. If the contacts are only slightly discoloured or uneven, it is sufficient to clean them with a rag or cloth moistened with petrol, but if they are found to be blackened

Fig. 28. What to Avoid when Truing up Contacts

In the centre the contacts are shown correctly trued up. On the left and right are shown the results of carelessly using a file, the contact surfaces having become convex and out of parallel respectively

(*From "The Motor Cycle"*)

or burned (probably due to oil or dirt), clean and polish the contacts first with *very fine* emery cloth and afterwards with a petrol-moistened cloth, being very careful to remove completely all traces of metallic dust and dirt.

Badly pitted or uneven contacts require to be very cautiously trued up and polished, and if a reasonable amount of cleaning with emery cloth does not get rid of the pitting, recourse must be had to a very smooth file (a jeweller's file is suitable), or better still a fine grade carborundum stone. It is only permissible to remove the very slightest amount of metal, for remember the contacts are not made of cheap material and there is only a small thickness of it. Accurate truing up of the contacts is most important, and great care must be taken to see that the surfaces are not only smooth and bright but meet squarely (see Fig. 28). They must not be carelessly made non-parallel or convex. Unquestionably the contacts are most easily and accurately trued up by removing the rocker-arm from the contact-breaker. With the rotating type contact-breaker (Fig. 25) the complete contact-breaker mechanism can be removed from its spindle after withdrawing the fixing screw, and the rocker-arm can then be readily prised off after pushing aside the locating spring. With

the stationary type contact-breaker it is also quite easy to remove the rocker-arm and also the insulated contact mounting if necessary.

In the case of the M.L. magneto the spring blade carrying the moving contact should be detached as this makes both contacts very accessible. When reassembling, see that the small backing spring is replaced with its convex side next to the spring blade, otherwise a fracture may occur.

Where a Lucas face cam type contact-breaker (see Fig. 27) is concerned, to render the contacts accessible for cleaning, remove the spring arm carrying the moving contact by detaching the fixing screw.

Loose Contacts and What to Do. The symptom is intermittent misfiring and the looseness is usually discernible to the eye. If the electrical contact is loose in the screw, the remedy is to get the contact soldered firmly in place by a jeweller (it is a delicate job). If the screw itself is loose, tighten the lock-nut.

Remove Pick-up Occasionally. About every 2000–3000 miles on magneto ignition models the H.T. pick-up (on twin-cylinder magnetos and "Magdynos" there are two) should be removed by releasing the securing clip or undoing the screws and the pick-up brushe(s) and the slip-ring thoroughly cleaned. A pick-up brush may be cleaned by wiping with a cloth moistened in petrol, but if it is badly worn it should be renewed. See that the brush works freely in its holder and that the spring is not weak. Before replacing the pick-up wipe the moulding clean with a dry cloth and clean the slip-ring track and flanges of all carbon dust and oil by inserting a soft cloth through the pick-up hole and rotating the engine with the cloth pressed against the slip-ring with a suitable piece of wood.

IGNITION AND VALVE TIMING

It is desirable to run with the ignition timed as closely as possible to the maker's setting and, of course, the valve timing must be absolutely accurate. However, it is seldom that the valve timing has to be disturbed, and to prevent any error in retiming a system of marking the timing wheels is employed.

Effect of Wrong Ignition Timing. Excessive spark advance is very bad for the engine and, besides causing difficult starting and poor slow running, produces knocking under the slightest provocation. The big-end bearing is subjected to very unfair stresses and its life is shortened accordingly. On the other hand, if the spark is excessively retarded, loss of power will occur and also overheating and probably banging in the exhaust system. The exhaust port is apt to get extremely hot and the exhaust valve may become burnt.

Retiming the Ignition. There are two methods of doing this. One can use the piston stroke method or the degree system. The ignition advance for any particular engine is given in millimetres or degrees of crankshaft rotation before top dead centre (T.D.C.) on the compression stroke. For instance, on the Standard O.H.V. "500" the correct ignition advance is 17 mm. or 40 degrees before T.D.C. with the ignition lever fully *advanced*. For ordinary purposes a sufficiently accurate ignition timing can be obtained by using the piston stroke method which is more simple than the degree method where one has to attach a degree disk to the crankshaft as explained in a later paragraph dealing with valve timing.

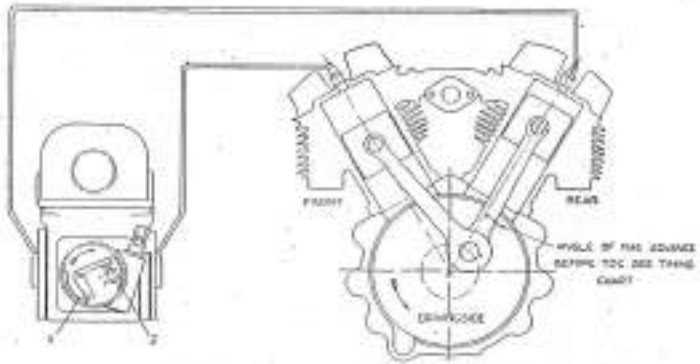

FIG. 29. IGNITION SETTING FOR TWIN ENGINE
On twin-cylinder engines the ignition must be timed for the rear cylinder and the cam for this cylinder is No. 1.

Using the piston stroke method, one needs a piece of stiff wire or a T.D.C. indicator (obtainable from most accessory dealers).

Timing on the Piston Stroke. To retime by the piston stroke method, first turn the engine over slowly by hand until the piston is at the top of the compression stroke (i.e. the upward stroke after the inlet valve has just closed) with both valves fully closed and the piston as near T.D.C. as possible. On side-valve engines with detachable heads, the position of the piston can be accurately ascertained by removing the cylinder head, although this is not really essential. On all 1927–38 J.A.P. overhead-valve and "high camshaft" engines remove the sparking plug (a compression cock on some side-valve engines can be utilized) and insert either a T.D.C. indicator or a piece of stiff wire or a pencil through the plug hole until it rests on the piston crown, and then rock the crankshaft to and fro until the position of the piston is such that

VALVE AND IGNITION TIMINGS FOR 1932-7 J.A.P. ENGINES
(These timings are also applicable to most 1938 engines)

TYPE OF ENGINE	Inlet		Exhaust		Ignition
	Opens Before T.D.C.	Closes After B.D.C.	Opens Before B.D.C.	Closes After T.D.C.	Advance Before T.D.C.
'150 c.c. S.V. Standard	15°	50°	50°	20°	35°
175 c.c. S.V. Standard	15°	50°	50°	20°	40°
200 c.c. " "					
250 c.c. " "					
300 c.c. " "					
350 c.c. " "					
350 c.c. S.V. Special					
350 c.c. " " Sports					
*350 c.c. " " " D.S.	23°	63°	65°	25°	40°
†350 c.c. " " " D.S.	23°	60°	63°	20°	40°
500 c.c. S.V. Standard	16°	65°	65°	25°	40°
550 c.c. " "					
600 c.c. " "					
600 c.c. S.V. Special					
600 c.c. " Sports					
500 c.c. " "					
500 c.c. " W/C					
600 c.c. " "					
680 c.c. S.V. Standard Twin	18°	45°	60°	25°	40°
750 c.c. " " "					
1100 c.c. S.V. W/C 60° Twin	14°	65°	65°	25°	38°
1100 c.c. " A/C " "					
1323 c.c. " " W/C " "					
1100 c.c. O.H.V. W/C " "					
980 c.c. S.V. Twin	17°	65°	65°	25°	45°
175 c.c. O.H.V. Standard	27°	67°	67°	27°	45°
200 c.c. " "					
250 c.c. " "					
*350 c.c. O.H.V. Standard	23°	63°	65°	25°	45°
*350 c.c. " Special					
*500 c.c. O.H.V. Standard	22°	62°	65°	25°	40°
*500 c.c. " Sports					
*600 c.c. " Standard	22°	62°	65°	25°	45°
†350 c.c. " Standard	28°	55°	60°	20°	45°
†350 c.c. " Special					
†500 c.c " Standard	16°	65°	65°	25°	40°
†600 c.c. "	16°	65°	65°	25°	45°
680 c.c. O.H.V. Std. Twin	23°	63°	65°	25°	45°
*1000 c.c. O.H.V. Std. Twin	25°	60°	65°	23°	45°
*175 c.c. O.H.V. Racing	27°	67°	67°	27°	45°
*250 c.c. O.H.V. Racing	27°	67°	67°	27°	45°
†1000 c.c. O.H.V. Std. Twin	15°	60°	63°	23°	45°
†175 c.c. O.H.V. Racing	38°	68°	63°	22°	45°
†250 c.c. O.H.V. Racing	24°	55°	62°	25°	45°
350 c.c. O.H.V. Racing	45°	65°	70°	Nor. 35°	42° Comp.
500 c.c. " "					
500 c.c. Dirt Track				High	38° Comp.
*1000 c.c. O.H.V. Racing Twin	25°	60°	65°	23°	45°
†1000 c.c. O.H.V. Racing Twin	15°	60°	63°	23°	45°
*8/75 h.p. Touring	15°	65°	65°	25°	45°
*8/75 h.p. Racing	45°	65°	70°	35°	42° L/C 38° H/C
"High Camshaft"	25°	47°	72°	17°	43°

* These timings are applicable to 1935–7 engines only.
† These apply to 1932–4 engines.

slight rocking produces *no movement* on the part of the indicator or wire. This is the T.D.C. position, and it is now necessary to revolve the engine slowly backwards until the piston is 17 mm. (or whatever the correct spark advance is) below T.D.C. position. To do this where the cylinder head is removed it is only necessary to measure the distance with a small rule. Where the cylinder head is not removed and no calibrated indicator is provided, scratch a mark on the wire or pencil previously mentioned to indicate T.D.C. and make another nick 17 mm. (or whatever is the advance) *above* the T.D.C. mark and rotate the engine *backwards* until the top mark occupies the position of the bottom mark. Obviously the piston will have descended a distance equal to that between the two scratches. This is the correct position of the piston at which the spark should be timed to occur with the ignition control on full advance, and hold this position.

Adjusting the "Break." Next check that the spark control lever or twist-grip is in the fully advanced position (check the action of the control at the magneto) and proceed to remove the contact-breaker cover. Examine the contacts carefully. They should be just beginning to separate if the timing is correct. If it is not, in the case of a Lucas "Magdyno," Lucas "Maglita" or magneto, remove the magneto chain case cover and proceed to loosen the lock-nut on the armature spindle and release the sprocket (without removing the chain) from its taper. If the sprocket is very stiff on the taper, the best plan is to wedge a lever behind it and then tap the lock-nut smartly. If it still refuses to budge, use an extractor tool. The armature can now be revolved slowly by hand until the contacts are beginning to "break." Probably the best and easiest way of checking this is to open the contacts and slip a very thin piece of paper (such as cigarette paper) between them. By pulling on the paper while slowly revolving the contact-breaker, the commencement of the "break" can be accurately determined. In this position retighten the magneto sprocket lock-nut. When tightening the lock-nut avoid straining the armature spindle in any way and do not hold the spindle by means of the contact-breaker. Finally check over the timing again, check the tension of the magneto chain (where fitted) and refit the timing case cover, not forgetting to use jointing compound or in the case of the "high camshaft" engines a good paper washer to make an oil-tight joint.

On Twin-cylinder Engines. The foregoing instructions apply to twin-cylinder models also, but care should be taken to see that No. 1 "break" at the contact-breaker is correct for No. 1 cylinder (firing first) which is at the *rear* on Vee twins. The cams are numbered and, as may be seen in Fig. 29, No. 1 cam which is for the rear (firing) cylinder is the one following the shorter space

between the two cams, when considered in the direction of armature rotation. On some J.A.P. Twins the magneto is bevel-driven off the camshaft and in this case when retiming the ignition it is necessary to remove the bevel cap-cover screws and then loosen the lock-nut securing the bevel on the camshaft and free the bevel from the taper; this permits of the armature being turned until the contacts are "breaking" at No. 1 cam with the rear piston the correct distance before T.D.C.

Be careful not to interchange the h.t. leads to the cylinders.

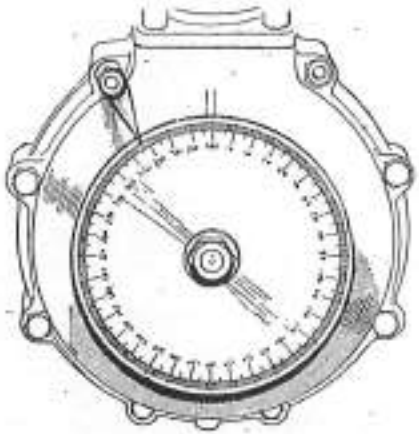

Fig. 30. Showing Crankshaft Degree Disk for Valve and Ignition Timing

A suitable pointer can be fixed as shown to one of the crankcase bolts. T.D.C position must first be accurately found

(*From "The Motor Cycle"*)

On Coil Ignition Models. On coil ignition models with a Lucas or Miller dynamo having the contacts operated by a central cam, it is unnecessary to loosen the driving sprocket on its shaft in order to time the "break," since the cam on the end of the armature spindle can be loosened and turned to the desired position after removing the centre fixing screw. If the cam is stiff, screw a $\frac{5}{16}$ in. bolt into the hole until the cam is pushed off the armature spindle. In some cases a slot is provided on the cam and a hammer and punch can be used.

On 750 c.c. and 1100 c.c. Twins with coil ignition the contact breaker is not mounted on the end of the dynamo but is housed separately on the timing cover.

Adjusting Magneto Chain. The magneto chain being completely enclosed and automatically lubricated seldom requires retensioning, unless, of course, the magneto has been moved on its platform. It is important not to let the chain run too taut because this imposes a severe side strain on the armature spindle. At the centre of the chain run there should be a total deflection of approximately $\frac{1}{16}$ in. To retension the chain, loosen the fixing bolts and slide the instrument the necessary amount to the rear. On the 1937–8 "high camshaft" engines the magneto chain is

automatically tensioned by means of a spring steel tensioner (see Fig. 15) and no adjustment is needed.

To the beginner valve timing seems very complicated, but it should be borne in mind that an approximate valve timing for all engines is such that the exhaust valve is almost closed and the inlet valve just opening with the piston on top dead centre on the exhaust stroke. To obtain high efficiency, however, an approximate timing will *not* do and the setting arrived at by Messrs. J. A. Prestwich & Co. after exhaustive experiments cannot be bettered.

Timing Gears are Punch-marked. To avoid the necessity for retiming the valves after dismantling the timing gear, the gears are punch-marked. A single camwheel is provided on J.A.P. singles but most twin-cylinder engines have two; to ensure that the valves are correctly timed it is only necessary to see that the punch mark on one of the small engine pinion teeth registers with the punch mark between two of the camwheel teeth. If the gears are always replaced in this manner, the timing is bound to be correct, unless the small engine pinion has been removed (see paragraph below). On the "high camshaft" engines a tooth on the driving sprocket is punch-marked and there is also a punch mark between two teeth on the half-time sprocket.

Removing Timing Case Cover. The magneto chain-case cover must first be removed by unscrewing the fixing screws and the next step is to remove the magneto driving sprocket from the camshaft extension with a sprocket drawer after unscrewing the lock-nut. If no drawer is available, tap the sprocket at the *bottom* of the teeth with a brass punch and hammer as shown in Fig. 31. The sprocket is *not* keyed and a smart blow should release the sprocket from the taper on the camshaft.

Having removed the magneto sprocket, the combined chain-case and timing cover can be gently eased off after undoing the securing nuts. On early type engines it will assist freeing the cover if the exhaust valve lifter is first raised by pulling the spindle up and finding the free position. On no account try to lever the cover off; if stiff, tap it off gradually. The camwheel(s) and cam levers may now be removed if desired.

Where the Magneto is Bevel-driven. On the Twins having a bevel-driven magneto, before the timing cover can be removed it is necessary to remove the bevel from the camshaft. To do this, remove the three bevel cap-cover screws, take the magneto off its base, and with a box spanner remove the bevel locking nut. The bevel may then be freed from the camshaft taper with a brass punch and hammer, as in the case of the magneto sprocket previously referred to.

If the Engine Pinion is Removed. During a thorough overhaul

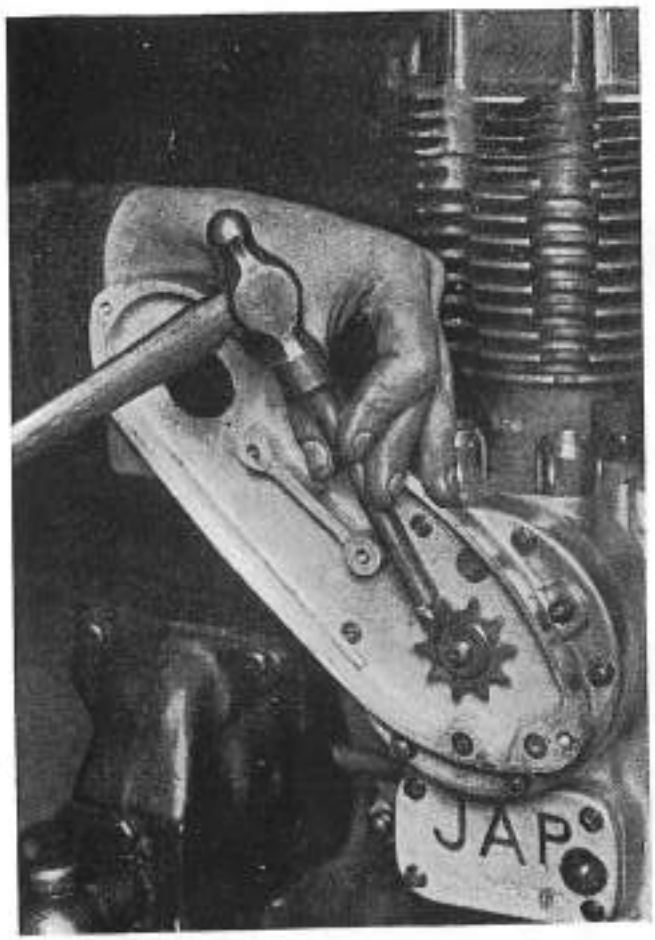

FIG. 31. REMOVING THE MAGNETO DRIVING SPROCKET PRELIMINARY TO TAKING OFF THE TIMING COVER
(Courtesy George Nowes, Ltd.)

it is sometimes necessary to remove the small engine pinion from the tapered and keyed mainshaft with the aid of an extractor tool after undoing the lock-nut (L.H. thread) with a box spanner and long tommy-bar. If this is done, careful note should be taken as to the method of keying the pinion to the main shaft. As a rule, there are three key-ways provided on the pinion, but on some engines five key-ways are cut on the vernier system so as to enable the valve timing to be varied by one-fifth of a tooth. If this is the case, to avoid upsetting the original timing, it is essential to use the correct key-way on reassembly, and it should therefore be marked during dismantling. If there is any doubt as to which is the correct key-way, it is advisable to retime the valves according to the maker's setting (see chart on page 54).

To Retime the Valves. If there is any doubt as to the accuracy of the valve timing, it should be checked and the valves if necessary retimed. The points to check are (*a*) the opening of the inlet valve, and (*b*) the closing of the exhaust valve. If these two points are accurately determined, obviously the closing of the inlet valve and the opening of the exhaust valve must *necessarily* be correct also, for the cam contours see to this automatically. Where a single camwheel is fitted, it is obviously only necessary to time the correct opening of the inlet valve.

As in the case of timing the ignition (page 53), two methods are available for setting the advance before T.D.C. for the opening of the inlet valve and the retard after T.D.C. for the closing of the exhaust valve. Measurements can either be taken on the piston stroke, or else a degree disk can be attached to the crankshaft (Fig. 30), and the crank positions relatively to T.D.C. determined according to the J.A.P. timing chart.

If a degree disk is attached to the crankshaft (and this method is preferable owing to the great accuracy provided and needed), the first step is to locate the exact position of T.D.C. With the piston stroke method this can be done as described on page 53. The next step (and this is very important) is to *adjust the valve clearances correctly*, otherwise the valves will open earlier or later than they should do. It should be particularly noted that *normal* valve clearances are suitable for valve timing purposes on J.A.P. engines. The camwheel should be meshed with the engine pinion in several positions until the correct advance and retard in millimetres or degrees before and after T.D.C. for the inlet and exhaust valves respectively is obtained. Timing of the valves must be done on the *exhaust stroke*, and not the compression stroke as in ignition timing. On all engines there is a valve overlap (i.e. the inlet opens before the exhaust closes) and a rough check on the timing is to "rock" the engine sprocket to and fro either side of T.D.C. position on the exhaust stroke, when the inlet valve should

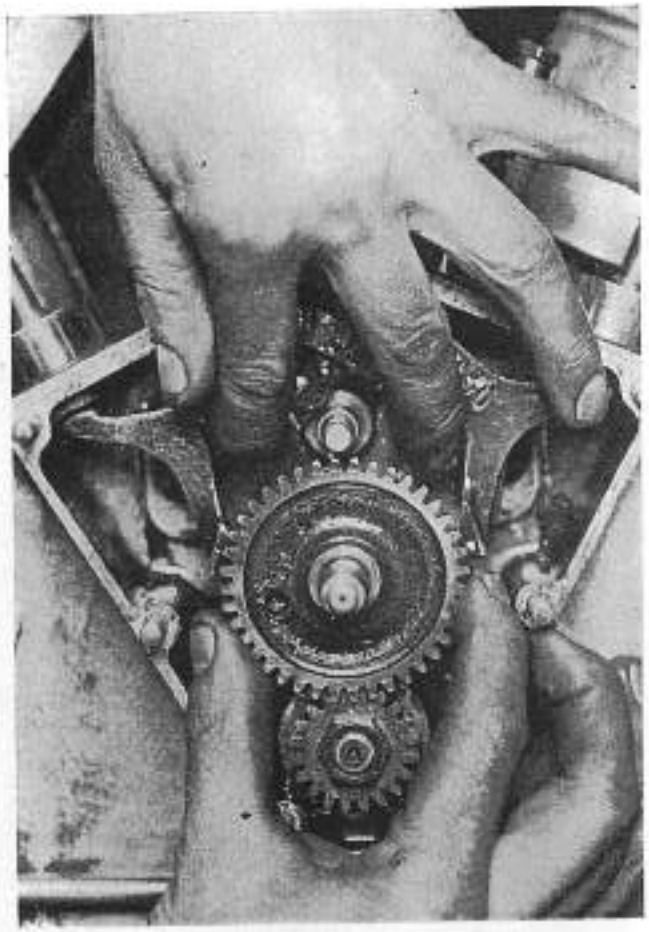

FIG. 32. WHEN REPLACING THE CAMWHEEL(S) SEE THAT THE PUNCH MARK COINCIDES WITH THAT ON THE ENGINE PINION (EARLY ENGINE SHOWN)

Cam levers with rollers bearing on the cams are fitted except on some O.H.V. engines with direct-acting tappets, and when replacing the camwheel the cam levers may be forced apart with the fingers as shown

(Courtesy George Neanes, Ltd.)

open and the exhaust valve close in quick succession. Always time the inlet valve first and the exhaust valve afterwards. When refitting the timing case cover, do not forget to replace the paper washer for the joint on "high camshaft" engines. On other engines use a jointing compound.

If the Timing Gears are Worn. When an engine begins to get old, considerable wear on the teeth of the timing gears may be present (which would be indicated by noise), and if it is not considered worth while fitting new gears, some improvement in engine performance can sometimes be obtained by using an alternative key-way.

WEAR OF CYLINDER PISTON, ETC.

Inspecting Cylinder. To examine for vertical scratches or scoring hold the cylinder so that light passes down the bore. If there is only slight scoring present, this can usually be remedied by lapping-in an old piston, but if the scoring is deep it is necessary to have the cylinder reground and a new piston and rings fitted by the makers, or else to have the scores built up by a special Barimar welding process. Regrinding and the fitting of an oversize piston and rings is also required if the cylinder bore has become worn badly and is stepped where the rings travel. Measurements of the cylinder diameter may be taken with a pair of internal callipers at various points in the bore with which the callipers must be kept quite square. On new engines of 70 mm. bore the piston clearance is 0·004 in. to 0·006 in. at the bottom of the skirt and from 0·007 in. to 0·009 in. above this diameter. After a big mileage has been covered the cylinder bore tends to become oval. Little wear occurs at the extreme top and bottom but a distinct ridge usually forms at the top position of the upper piston ring where wear is greatest due to connecting-rod thrust. From this point wear gradually decreases to the bottom position of the lowest ring. In the case of a cast-iron cylinder of 70–80 mm. bore and aluminium piston, if wear exceeds about 0·012 in. a new cylinder and piston, or a rebore, are required. It should be noted that where considerable cylinder ovality exists it is useless to fit new rings only as they are bound to make poor circumferential contact with the cylinder.

The Piston Rings. As the rings are responsible for maintaining engine compression they must make good circumferential contact with the cylinder walls, be free but good fits in the piston grooves, and have the correct size gaps between the ends. The rings must also be springy and exert uniform pressure.

A simple method of testing for circumferential contact is to push a ring into and square with the cylinder bore and hold it in front of a source of light. If contact is bad, rays will penetrate

between the ring and cylinder and it will be possible to slip a 0·001 in.–0·002 in. feeler gauge between the two.

New J.A.P. piston rings have 0·002 in.–0·003 in. side play in the piston grooves and, if excessive play (0·004 in.–0·006 in.) develops, new rings should be fitted or the grooves will quickly suffer. If play exceeding about 0·004 in. develops, it may be necessary to true up the grooves on a lathe and fit oversize rings. To test a ring for side play, place it in its groove and note how much it can be moved up and down. Another method is to remove the ring and roll it around the groove.

As has already been mentioned on page 24, a fair average gap for piston rings on J.A.P. engines is for standard engines 0·003 in. per inch of bore diameter and for racing engines 0·005 in. If the gap exceeds $\frac{1}{16}$ in. on standard engines, new rings should be fitted. If new rings are fitted, it is essential to see that the gaps are not too small, otherwise an engine seizure may be caused. To increase the gap, clamp the ring in a vice (using soft clams) and carefully file the ends. The best method of testing the gap is to push a ring up into the cylinder with the piston skirt a short distance and then check the gap with a feeler gauge of the right thickness. If an engine has been dismantled, examine the ends of the rings and note if they are carbonized or polished; if polished the gap is probably too small. If new rings are a tight fit in their grooves, rub the rings on one side on a sheet of carborundum paper laid on a piece of plate glass.

Testing Mainshaft Bearings. Although 0·005 in. to 0·008 in. crankshaft end play is permissible, there should be no appreciable "shake" in the roller bearings (a bronze bearing is sometimes used on the timing side). To test for "shake," grip the engine sprocket with both hands and try to "rock" the crankshaft. If the timing cover has been removed, see if it is possible to lever up the timing side mainshaft slightly with a tyre lever. End play of the crankshaft can be taken up by fitting new thrust washers.

Testing for Play in Big-end Bearing. Disperse the oil film on the big-end bearing with some paraffin and then after putting the connecting-rod on T.D.C. or B.D.C. try to push and pull the rod vertically, when any appreciable play in the roller big-end should be at once felt. If much play exists, a new roller bearing should be fitted and as this necessitates parting the flywheels (a delicate operation requiring much care in subsequent truing up) and pressing a new race into the big-end, it is best to return the complete crankcase and flywheel assembly to Messrs. J. A. Prestwich & Co. Ltd. for expert attention (address page v).

CHAPTER IV

HINTS FOR A. J. W. OWNERS

THE hints in this chapter deal with the popular 1934 and later A.J.W. "Red Foxes" and "Flying Foxes,"* but it should be noted that much of the information (except in regard to the engine) applies also to the "Flying Vixen." On this particular model, however, a "Python" engine was fitted in 1934, a special "T.T. Replica" J.A.P. engine in 1935, and a Stevens engine in 1936. It is not possible in this handbook to deal with these engines and no attempt to do so will be made.

"Fox" Engine Lubrication. All 1935 and subsequent "Flying Foxes" and all "Red Foxes" of 1934 and later date have a 490 c.c. J.A.P. engine with dry sump lubrication and for full maintenance instructions the reader is referred to pages 1 to 8. In the case of the 1934 "Flying Fox" a "Python" engine was installed. On all "Foxes" it is important to keep the oil-level at or above the half-full mark in the welded steel separate tank which holds ½ gal. and has a removable gauze filter below the filler cap where the oil return can be observed. Always replenish with one of the engine oils mentioned on page 1 and do not forget to go steady with a new machine during the first 500 miles (see page 1). No adjustment for the oil supply is provided.

Magneto and Dynamo Lubrication. Lucas magnetos and belt-driven Miller dynamos are standard "Fox" equipment (except on 1934 "Red Foxes" which have coil ignition) and advice on lubrication will be found on page 13. When lubricating the Miller dynamo be careful to avoid excessive lubrication, otherwise oil may reach the commutator and cause much trouble.

The A.J.W. Control Lay-out. The lay-out of the handlebar controls is as follows. On the left-hand side of the bars there are the ignition lever, the exhaust valve lifter, and the clutch; on the right-hand side are situated the throttle twist-grip, the air lever and the front brake lever. The lighting switch and ammeter are incorporated on the Miller headlamp.

Positive-stop foot gear change is provided on the "Flying Foxes" but not on the "Red Foxes" which have hand control, upward gear changes with foot control being made by kicking the pedal *down* and vice versa. The pedal returns to the same position

* A.J.W. motor cycles are made by the A.J.W. Motor Co. Ltd. of Friernbay St., Exeter and distributed by Messrs. Pride & Clarke, Ltd. of 158 Stockwell Road, Brixton, S.W.9.

after each change has been made. Be careful not to use force on the pedal, and to ensure smooth changes do not lift the foot from the pedal until the clutch has been re-engaged.

With regard to the carburettor controls, the throttle is opened by inward twisting of the grip and the air lever is also pulled inwards to open. To retard the ignition, pull the lever inwards. To ensure a quick start from cold, close the air lever completely, open the throttle a fraction of a turn (about $\frac{1}{16}$ in.), and move the ignition lever to about half retard. Then flood the carburettor, raise the exhaust valve lifter, kick the engine over, and drop the lifter smartly.

Tuning the Carburettor. All "Foxes" have a Bowden carburettor (type A) and full instructions for tuning will be found on page 44. The A.J.W. Motor Co. Ltd. carefully adjust each Bowden instrument after testing and it is seldom necessary to interfere with this setting. On 1934–5 "Foxes" the standard jets fitted are a 120 main and 75 pilot. Later "Fox" models have the same size main jet but a 55 pilot.

The standard jet sizes should give a petrol consumption of about 85 m.p.g., but if very economical running is desired, experiments should be made with the smaller size jets provided with the machine. Always remember, however, that too weak a mixture is liable to cause overheating. Except for changing the main jet and in rare instances the pilot jet, further tuning is limited to the setting of the throttle stop screw and the slow running adjuster screw. Faulty adjustment of the latter frequently causes heavy petrol consumption and it should therefore be very carefully set with a warm engine and the mixture control on the handlebars (the air lever) fully open. Screwing out the adjuster weakens the mixture and screwing it in enriches the mixture. Do not forget occasionally to remove the gauze filter situated by the feed and clean it and the filter cap thoroughly. Also verify that both the pipe lines are clear.

Sparking Plugs. For touring purposes the makers advise the fitting of an 18 mm. Lodge H1 or K.L.G. S1, or where 14 mm. plugs are specified, a Lodge H14 or K.L.G. LKS5. Keep the plug thoroughly clean and the gap at the electrodes adjusted to 0·020 in. on magneto models and 0·025 in. on coil ignition models (see notes on page 47).

Care of Contact-breaker, etc. On the 1934 "Red Fox" which has Miller coil ignition the contact-breaker is mounted on the timing cover but on all other models it constitutes part of the Lucas magneto. Lucas contact-breakers of recent design are of the face cam type as shown in Fig. 27 and comprehensive advice on its maintenance and the care of earlier rotating type Lucas and stationary type Miller contact-breakers is given on pages 48 to 52.

Cleanliness and correct adjustment of the gap at the contacts are most important. In the case of the 1934 "Red Fox," allow a gap of 0·020 in. and on the other "Foxes" a gap of 0·012 in. A feeler gauge of the right thickness is provided in the tool-kit. Where a magneto is fitted, do not forget occasionally to remove the h.t. pick-up and clean both this and the slip-ring below (see page 52). If the magneto chain requires retensioning, loosen the magneto base bolts and slide the magneto backwards on its platform until there is no more than $\frac{1}{16}$ in. slack in the chain.

Ignition Timing. The correct ignition timing (see page 53) for all 1934 and later "Red Foxes" and "Flying Foxes" with 490 c.c. J.A.P. engines is to set the contact-breaker points so that they commence to "break" with the piston 40 degrees or 17 mm. before top dead centre and the ignition lever fully *advanced*.

Miller Dynamo Maintenance. The subject of lubrication has already been discussed and the only other attention needed is in regard to the commutator which, like the contact-breaker, must be kept scrupulously clean. Here is an important warning; before touching the commutator first *disconnect the positive lead from the battery*, otherwise there is a risk of a short circuit causing the ammeter to be burnt out or the dynamo polarity to be reversed.

With a new dynamo no attention to the commutator is needed for several thousand miles, but afterwards it is advisable to remove the commutator cover about every 1000 miles and inspect the carbon brushes which must be absolutely clean and able to move freely in their holders. There must also be perfect contact between the brushes and the copper segments. To clean the brushes with a petrol moistened cloth, pull back each brush-retaining spring and remove the brush by pulling on its lead, being careful to see that the brush pressure spring is clear of the brush holder. Examine the brushes for wear and unevenness and true up if necessary. Generally it is best to replace the brushes before serious wear develops, as this prevents sparking which causes blackening of the commutator and an unsteady charging current. To clean a blackened commutator, press (with a piece of wood) fine glass-paper against the segments while rotating the armature. Should there be no blackening but just the accumulation of some grease and carbon dust, hold a cloth moistened in petrol against the segments and turn over the armature slowly. If the segments are highly polished and of a *dark bronze* colour, leave them alone. Do not interfere with the cut-out except for very occasional cleaning of the contacts.

How to Retension the Belt Drive. To ensure smooth and vibrationless running at all speeds, an endless Dunlop belt of V-section drives the Miller dynamo off the crankshaft by means of pulleys (see Fig. 33). A simple method of adjusting the belt tension is

provided. The armature is mounted eccentrically in its housing, and to retension the belt it is only necessary to loosen the dynamo strap-securing bolt and rotate the dynamo bodily anti-clockwise to tighten and clockwise to slacken. Keep the belt tensioned so that there is just no slack, but do not tighten beyond this point. Should oil accidentally get on the belt and cause slip, the remedy is not to tighten the belt but to clean it with a rag and petrol. If slip occurs due to wear of the rubber, renew the belt at once.

Care of Battery. An Exide 13 ampere-hour battery is provided

FIG. 33. THE DYNAMO BELT SHOULD BE KEPT JUST TAUT
If the belt is excessively tightened, a strain is imposed on the armature

on all A.J.W. machines under the saddle and is easily and instantly removable. To ensure a brilliant beam from the 8 in. or 7 in. Miller headlamp while riding by night it is imperative to pay regular attention to the battery, and this is particularly essential in the case of 1934 "Red Foxes" where current is drawn not only for the lights and horn but also for the coil ignition system. There are five essential points in battery maintenance. Here they are—

(1) Always keep the level of the electrolyte just above the tops of the plates.
(2) Top up whenever necessary with pure *distilled* water.
(3) Never leave the battery in a fully discharged state.
(4) Make intelligent use of the headlamp charging switch.
(5) Occasionally check the specific gravity of the electrolyte with a hydrometer.

To Remove Battery. In order to top up the battery or check the specific gravity of the acid it is necessary to release the fixing strap and remove the battery from its mounting. On machines with low level exhaust pipes the complete battery can be readily detached, but on machines with high level pipes (i.e. on the 1935–7 "Flying Foxes") the exhaust pipe on the off-side prevents this being done and it is necessary to remove the battery lid before the battery can be lifted clear.

Topping Up. Examine the acid level at least once a fortnight, and even more frequently in hot weather and tropical climates. Be careful not to hold a naked light near the vent holes. If the level is below the tops of the plates, add distilled water as required. This should be added just before a charge run, as the agitation due to running and the gassing will thoroughly mix the solution. If the solution has been spilled by accident, add diluted sulphuric acid of equal specific gravity to that in the remaining cells. When the inspection is carried out, hydrometer readings (specific gravity values) should be taken of the solution in one of the cells, and occasionally of that in all the cells. These readings are the most reliable method of indicating accurately the condition of the cells. Keep the battery connections clean and free from acid. Smear well with vaseline to prevent corrosion.

Charging Hints. The amount of charging varies considerably owing to various running conditions. If the light is poor and falls off when the machine is standing, charging should be immediately carried out. It is difficult to lay down rigid instructions on the question of charging, since it largely depends upon the extent to which the lamps are used. With the coil ignition models more charging is necessary than with the magneto ignition models, since the current is used for ignition and lighting. The following suggestion may serve as a rough guide: leave the switch in the "charge" position during the day for about 50 per cent of the night riding (a slight charge should flow to the battery when running with lamps on). Charging a battery after discharge raises the specific gravity, and discharging lowers the specific gravity. Place on charge, either by running the engine or using an independent electrical supply, immediately any battery whose specific gravity has fallen as low as 1·140. Take hydrometer readings whenever trouble is experienced with any part of the electrical system. *The correct specific gravity reading is* 1·260–1·280 in the case of the Miller batteries (fully charged at 60° F.).

How to Adjust Focus (Miller Headlamps). To detach the lamp front, release the spring clip at the bottom and pull the front off. To focus the bulb, insert it in the bulb-holder until the bayonet fixing pins are right home and give a further twist to the right. This will enable the bulb and holder to be slid backwards or

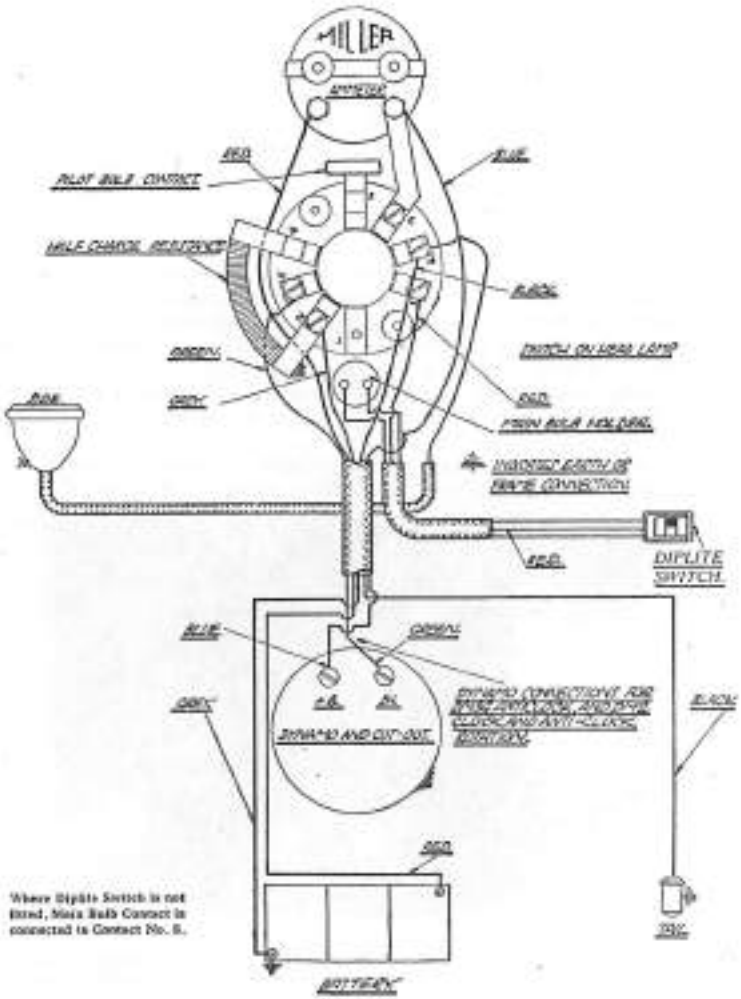

Fig. 34. Wiring Diagram for 1934 And Later A.J.W. "Foxes" with Miller Lighting

forwards until the correct focus is obtained. On releasing the extra twist, the bulb is securely held.

A good method of focusing the headlamp is to take the machine to a level plot of ground and place it so that the lamp is about 40 yards from a fence or wall and measure the distance from the centre of the headlamp to the ground and chalk on the fence or wall a mark at the same height. Then switch on the main bulb and note if the centre of the beam coincides with the mark. If it does not do so, loosen the headlamp bracket nuts and tilt the lamp as required. Then proceed to focus for intensity of light as described in the preceding paragraph.

Miller Bulb Replacements. The correct bulbs to fit are as follows. On magneto ignition models fit a 6V.24/24W. double-filament main bulb and 6V. 3W. s.c.c. pilot, sidecar, and tail bulb. On coil ignition models fit a 6V. 18/18 W. double-filament main bulb and the above-mentioned pilot and tail bulbs. For the ignition tell-tale a 2·5 V. flashlamp bulb is suitable.

Hints on Decarbonizing. Decarbonizing the 490 c.c. J.A.P. engine on a "Red Fox" or "Flying Fox" is perfectly straightforward and is fully dealt with in Chapter II. To make the job easy, the petrol tank should be taken right off by removing the front fixing bolt and the two bolts at the rear after disconnecting the petrol pipes and shutting the two taps. If on dismantling the cylinder head there are any signs of "blowing," renew or re-anneal the copper washer (page 31) and, after grinding-in the valves if necessary (page 25), set both valve clearances to 0·002 in. as described on page 34. Should any valve springs need replacement, the author advises the fitting of "Aero" springs. All J.A.P. engine spares can be had from Exeter, Pride & Clarke, Ltd., or from the engine manufacturers.

Cleaning Silencer. On 1934–7 "Flying Fox" models which have what appear to be straight-through exhaust pipes there is a Burgess sound-absorbing element in each pipe consisting of a long perforated tube packed with glass wool. This is apt to become choked, and, when decarbonizing, the mufflers which are fixed by a nut and bolt at each end should be removed and the carbon cleaned from the perforated holes with a stiff wire brush.

Gearbox Replenishment. An Albion heavyweight gearbox is fitted to most "Foxes" but some have a "Python" box. To prevent gearbox trouble, the level of lubricant should be inspected about every 1000–1500 miles, and if necessary replenished with engine oil (see page 1), preferably Patent Castrol "XXL." In the case of the "Python" gearbox, replenish up to the level of the filling plug and in the case of the Albion gearbox the addition of a quarter of a pint every 1000 miles should be sufficient. On this gearbox the clutch sprocket, when free, runs on a ball race

and occasionally a few spots of oil should be dropped down the side of the sprocket between the corks with the clutch disengaged. Also put a little oil on the lever end of the clutch rod. It is considered good practice to drain the gearbox after completing the running-in period and replenish with fresh oil.

Gear Control Adjustment. No adjustment is necessary on models with foot control, but on those models having hand control (i.e. the three-speed models) it is usually necessary to readjust the gear control after retensioning the primary chain. To adjust the control, remove the gear rod yoke pin at the hand lever end and adjust the yoke end with the gear lever centrally placed in the second gear quadrant notch.

Adjustment of Clutch. Always allow a little backlash at the clutch handlebar lever (or $\frac{1}{32}$ in. between the ball in the clutch lever and the push-rod), but avoid excessive backlash which makes proper clutch disengagement difficult. Stretch in the Bowden cable can be taken up by means of the cable adjuster and also by means of the screw on the push-rod lever arm. On 1934–5 models the clutch spring pressure cannot be adjusted, but on later models the pressure can be adjusted by means of the four spring adjusting screws in the outer clutch plate. When new clutch corks become necessary, it is best to get them inserted by the makers as the faces need to be ground true. Six rubber segments in the clutch back-plate form the shock-absorber, and after a very big mileage it is desirable to renew the rubbers. If oil gets on the cork insert plates, clean them with petrol. See that the clutch sprocket is always kept in perfect alinement with the engine sprocket and that the primary chain is not too tight.

Care of Primary Chain. The primary chain on all models is completely enclosed. On 1934–5 "Foxes" it is lubricated by a pipe from the engine breather, but on later models it is positively lubricated, an oil feed being taken from the oil tank on "Red Foxes" and from the oil-way in the timing case cover on "Flying Foxes." A regulator is provided and this should be turned *three* notches (just before No. 1) which gives a supply of about six drops per minute. The primary chain usually needs retensioning during the first 1000 miles and afterwards much less frequently. Correctly tensioned, there should be $\frac{3}{8}$ in. to $\frac{1}{2}$ in. deflection with the chain in its tautest position. To adjust the chain tension, first remove the chain-case cover by disconnecting the rear brake rod, removing the foot-rest and unscrewing the two cover fixing bolts. Then on 1934–5 models loosen the gearbox fixing nuts and draw the gearbox backwards by means of the drawbolt until the correct chain tension is obtained. On 1936 and later models the gearbox can be pivoted the necessary amount by means of two adjusters screwed into each side of the slot in the gearbox

casing. After adjusting the chain, check the gear control adjustment on a "Red Fox."

Care of Secondary Chain. The rear chain should always be kept clean, well lubricated, and properly tensioned. On 1936 and subsequent "Foxes" automatic lubrication from the engine breather is provided, but on 1934–5 models there is no means of lubrication. Whenever the chain shows signs of running dry some grease such as Price's "Rangraphine" or "Castrolease Graphited" should be rubbed into the chain with a stiff brush. Engine oil can be used but grease is much better as it is not thrown off by centrifugal force. About every 2000 miles the chain should be removed, cleaned in a bath of paraffin, hung up to dry, and then immersed in a bath of hot grease or tallow heated (until liquid) over a tin of boiling water. Do not remove the chain till the grease has cooled off.

With regard to chain tension, there should be $\frac{1}{2}$ in. to $\frac{3}{4}$ in. deflection with the chain in the tightest position, and to retension the chain it is only necessary to slacken the wheel spindle nuts and adjust the draw-bolts (which go over the wheel spindle) until the wheel is moved in the forward slotted fork ends the requisite amount. When adjusting the draw-bolts be sure that this is done uniformly on both sides, otherwise the wheel and sprocket alinement will be upset. To check the alinement, use a straight edge or a taut piece of string. If a chain has stretched very badly, remove a link. See that the spring link is fitted with the open end facing *away* from the direction of chain travel.

To Remove Rear Wheel. As the rear fork ends are slotted forward the rear wheel can be removed without disconnecting the chain. To remove the wheel, put the machine on the stand and lift up the hinged tail piece of the mudguard after loosening the two stay bolts. Next disconnect the rear brake rod and remove the brake-plate anchorage bolt. Then loosen the wheel spindle nuts enough to permit the chain draw-bolts to lift clear and drop the wheel forward. Finally, after lifting the chain off its sprocket, the wheel can be slid back and out.

To Remove Front Wheel. Put the machine on its stand and let down the front stand (situated under the crankcase on "Flying Foxes"). Then disconnect the brake rod, loosen the wheel spindle nuts, free the recessed washers, and allow the wheel to drop out of the fork ends.

Hub Lubrication and Adjustment. A good quality medium-bodied grease (such as "Castrolease Medium") should be injected through the hub nipples about every 3000–4000 miles. Avoid excessive lubrication, or grease may get on to the brake linings.

Should play develop in the cup and cone bearings, this can be taken up by means of the adjustable cone and lock-nut. On 1936

and later "Foxes" the adjustable rear wheel cone is inside the brake drum and the wheel must be removed in order to adjust the bearings.

Correct Tyre Pressures. To get the maximum life from the tyres and the best road holding, check the tyre pressures frequently with a pressure gauge and pump up to the correct pressure if necessary. Dunlop or Firestone tyres, 26 in. × 3·25 in., are fitted and the pressures for solo riding should be 16 lb. and 20 lb. per sq. in. for the front and rear tyres respectively. If a

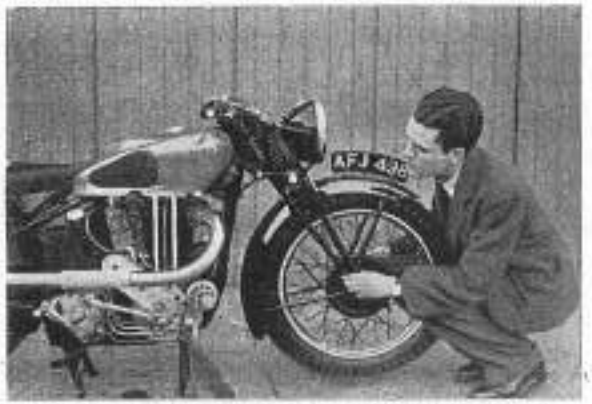

Fig. 35. Testing for Play in the Steering Head

26 in. × 3·00 in. front tyre is fitted, add an extra 3 lb. per sq. in. For sidecar driving the correct pressures are 20 lb. and 26 lb. per sq. in. for front and rear tyres. For prolonged pillion work the pressure of the rear tyre should be increased by 2–3 lb. per sq. in.

Do Not Permit Play in the Steering Head. Check for play in the steering head after the first 500 miles and then at intervals of 2000–3000 miles. Adjustment is greatly simplified by the front stand fitted under the crankcase which takes the weight off the bearing and enables the steering freedom and play to be tested as shown in Fig. 35. No appreciable play or stiffness should be present and adjustment is made by loosening the bolt on the steering head clip and tightening or slackening the adjuster nut.

About every 1000 miles apply the grease-gun to the nipples provided for lubrication of the steering head bearings.

Looking After Front Forks. About every 500 miles inject some grease into the fork spindle lubricators until it begins to

ooze out on both sides. Side play in the fork shackles may easily be felt by striding the machine and locking the forks over from one side to another. Adjustment is made by means of the adjuster nuts on the near-side after first loosening the locking nuts.

Do Not Neglect the Speedometer. There is a grease nipple on the speedometer gearbox on 1936 and later "Foxes" and the grease-gun should be applied about every 2000 miles.

Brake Cam Spindles, Control Levers, etc. Occasionally apply the oil-can to items such as the brake cam spindles, controls, etc. Oilers with spring cover clips are provided for the former.

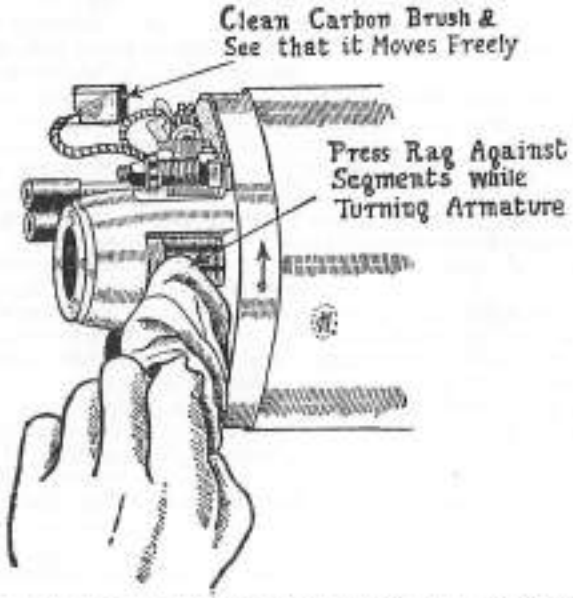

Fig. 36. Sketch Showing Commutator End of Miller Dynamo. The Segments are being Cleaned with a Rag and One of the Brushes is Shewn Removed

CHAPTER V

HINTS FOR COTTON OWNERS

THE general specification of all four-stroke Cottons is very similar and engine capacities range from 150 c.c. to 600 c.c. The majority of Cottons* have J.A.P. engines but on some Blackburne engines are fitted. It is not proposed, however, to deal with the last-mentioned.

Cotton Engine Lubrication. Machines of large capacity are in most cases provided with (non-adjustable) dry sump lubrication, but many of the smaller capacity models have (adjustable) wet sump lubrication. For full maintenance instructions see pages 2 and 9 respectively. On wet sump models do not forget to drain and flush out the crankcase occasionally and on dry sump models to clean out the oil tank and gauze filter.

Miller "Magdynamo," Dynamo, Lucas "Maglita" Lubrication. Where Miller equipment is specified, see notes on page 13. In the case of the Lucas "Maglita," place a spot of oil on the steel cam and another drop in the holes under the contact-breaker and in the lubricator at the driving end about every 1000 miles.

The Cotton Controls. The position of the controls is the same as on the A.J.W. (see page 63) and the lighting switch is mounted on the headlamp. The carburettor controls operate by inward movement, but this does not apply to the ignition lever on all models. To adjust the controls for starting from cold, follow the advice given on pages 41 and 64 respectively for Amal or Bowden carburettors.

Carburettor Tuning. If an Amal carburettor is fitted, tune it as described on page 41; if a Bowden is fitted, follow the advice given on page 46 (also note hints on page 64).

Suitable Plugs. For advice on what plugs to use and how to keep a plug in good condition, see pages 47 to 48. Remember that on coil ignition models a slightly larger gap at the electrodes is advisable than on magneto ignition models.

The Contact-breaker. On all Cotton models the contact-breaker is incorporated on the generator itself. Keep the gap at the contacts adjusted to 0·010 in., 0·010 in., or 0·012 in. in the case of a Lucas "Maglita," Miller dynamo, or Miller "Magdynamo" respectively. Full information on contact-breaker maintenance will be found on page 48.

* Cotton motor cycles are made by the Cotton Motor Co. Ltd. of Gloucester and distributed by Messrs. Pride & Clarke, Ltd.

Ignition Timings. The correct ignition timings for different J.A.P. engines are tabulated on page 54 and instructions for retiming the ignition will be found on pages 52 to 56.

Dynamo Maintenance. For hints on lubrication, see previous paragraph. Where a Miller "Magdynamo" or dynamo is provided, attend to the commutator and brushes as described on page 65. Where a Lucas "Maglita" is fitted, examine the brushes every 2000–3000 miles and see that they are clean, free from oil, and slide freely in their guides. Do not disturb the primary of the ignition coil.

Retensioning Generator Chain. Always maintain about $\frac{1}{16}$ in. slack in the chain. On Cottons with a Lucas "Maglita" or Miller "Magdynamo" retensioning of the chain entails moving the generator backwards on its slotted platform, but on coil ignition models the chain can be tightened by rotating the dynamo in its housing, the armature being eccentrically mounted.

The Battery. Where Miller equipment is specified, follow the maintenance instructions given on pages 66 to 67 (with the exception of the paragraph relating to battery removal). These instructions also apply to Lucas lead-acid batteries used in conjunction with the "Maglita," but it should be noted that the correct specific gravity reading for Lucas batteries is 1·285–1·300 when fully charged at 60° F.

Bulb Replacements. The correct Miller replacements are given on page 69. In the case of Lucas "Maglita" equipment, fit a 6V. 12/12W. double-filament main bulb, a 6V. 3W. s.c.c. pilot, side-car, and tail bulb. Focusing can be carried out for Miller lamps as described on page 67.

Decarbonizing. On Cotton motor cycles, owing to the inclination of the engine in the frame and the space provided by the sloping tank tubes, it is not necessary to remove the petrol tank in order to decarbonize. If it is desired to remove the tank this can be readily done by removing the four bolts which secure it. Instructions for dismantling and decarbonizing the side-valve, overhead-valve, and "high camshaft" J.A.P. engines will be found in Chapter II. Valve grinding is dealt with on pages 25 to 30. When valve spring replacements become necessary, the fitting of "Aero" springs is advised. After decarbonizing and valve grinding, check the valve clearances as described on page 33. The tubular silencer cannot be dismantled for cleaning.

Gearbox Lubrication. Burman three- and four-speed gearboxes (with the shock-absorber incorporated in the clutch) are used on Cottons, and on new machines they are charged with sufficient grease for 1000 miles running. At the end of this period and subsequently at intervals of 1000–1500 miles 2–3 ounces of grease should be inserted through the filler orifice after removing the

metal cap on top of the gearbox. Avoid excessive lubrication or grease may be forced out of the bearings; it is best to keep the box about *two-thirds* full. Suitable greases to use are Wakefield's "Castrolease Medium," Gargoyle "Mobilgrease No. 2," Shell Motor Grease Soft, and Tecalemit. To assist filling, turn the gears over with the kick-starter and in very cold weather add a little engine oil. Occasionally the various joints in the gear change mechanism should be lubricated, and the same applies to the clutch operating rod, the clutch lever, and the Bowden cable.

Adjustment of Gear Control. With foot control no adjustment is needed. With hand control, adjustment after retensioning the primary chain can be readily effected by screwing up or down the lower yoke end on the rod until the gears mesh with the gear lever placed centrally in second or first gear quadrant notch in the case of three- and four-speed gearboxes respectively. On most Burman gearboxes the provision of internal indexing facilitates adjustment, as this makes it possible to feel the gears engage.

Clutch Adjustment. There should be about $\frac{1}{32}$ in. clearance between the clutch push-rod and the ball in the operating lever. Adjustment can be made by means of the cable stop and lock-nut, and a further adjustment is provided by the screw adjuster in the centre of the outer clutch member. The clutch springs are adjustable but the screw heads should be kept approximately flush with the outer member. When adjusting, tighten each screw half a turn at a time as even tightening is essential. Keep the clutch control lubricated, and for notes regarding the cork inserts and sprocket alinement, see page 70.

Dismantling Burman Clutch. Unscrew the spring adjusters and remove the springs and spring cups. Then remove the spring plate and withdraw the other plates. To withdraw the clutch bodily, take off the spring plate and unscrew the nut which secures the clutch body to the castellated mainshaft.

Care of Transmission. The primary chain is well enclosed and automatically lubricated by the engine breather, but the secondary chain requires to be periodically greased and cleaned as described on page 71. Keep the chains tensioned so that there is $\frac{3}{8}$ in. to $\frac{1}{2}$ in. and $\frac{1}{2}$ in. to $\frac{3}{4}$ in. deflection in the front and rear chains respectively. Adjustment of the front chain is by moving the gearbox backwards or forwards by means of the usual draw-bolt, and adjustment of the rear chain is by accessible adjusters on the outside of the rear fork ends which, unlike the A.J.W., are rearward slotted. Note the remarks on page 71 regarding alinement.

To Remove Primary Chain-case. The primary chain-case is secured at the front to the crankcase boss and at the rear to the

chain-stay end and can be detached by undoing the two securing nuts.

Wheel Removal. The rear wheel is removed in the usual manner after disconnecting the chain and rear brake rod and loosening the spindle nuts. To facilitate removal the tail piece of the rear mudguard is detachable. The front wheel is fitted into the usual slotted fork ends and the anchor plate is slotted to receive the anchor bolt. Removal of the wheel is self-obvious.

Hubs and Tyres. Lubricate the ball-bearing hubs as described on page 71 and take up any play which may develop by means of the adjustable cones and lock-nuts. As regards tyre pressures, suitable solo pressures for most Cottons with Firestone or Goodyear tyres are 18 lb. and 19 lb. per sq. in. for front and rear tyres respectively. For prolonged pillion work add 3 lb. per sq. in. to the pressure of the rear tyre.

Steering Head and Fork Adjustment. Lubricate and adjust the steering head bearings as described on page 72. On the Cotton there is no central stand and, when testing the steering head for play, the front wheel should be lifted clear of the ground by placing some packing such as a box beneath the crankcase. In the case of machines with pressed-steel front forks there is no adjustment for play in the fork shackles, but on the tubular type forks play can be taken up by the adjusting nuts between the links and fork girders. Lubricate the forks as described on page 72.

The Speedometer. About every 2000 miles apply the grease-gun to the grease nipple provided on the speedometer gearbox.

INDEX

MADE IN GREAT BRITAIN AT THE PITMAN PRESS, BATH
C8—(T.107)


Approved and recommended by the makers of
J·A·P
engines
LODGE
LODGE
LODGE
THE BEST PLUG IN THE WORLD
Lodge Plugs are obtainable everywhere, from 5/- each, in sealed metal boxes
Made completely in England by Lodge Plugs Ltd., Rugby